4GB / 8GB Radiation Tolerant DDR4 Memory

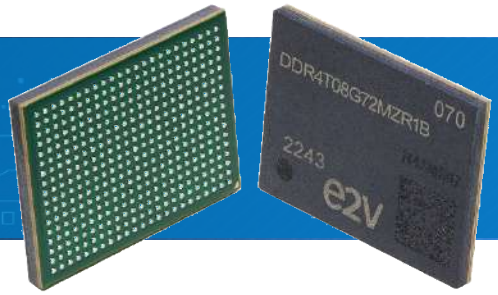

PRODUCT OVERVIEW

The 4GB / 8GB Radiation Tolerant DDR4 Memory Multi-Chip Package (MCP) is a Ultra High Density Memory Solution, targeting Space Embedded Systems &

APPLICATIONS

Such MCP products achieve significantly higher memory performance and density per cubic inch than using several discrete memories.

TOP LEVEL FEATURES

- **Density** 4GB / 8GB
- **Bus width** 72 bits (64 bits data + 8 bits ECC)
- **Speed** Up to 2400 MT/s
- **Module size** 15 mm x 20 mm x 1.92 mm
- **Solder Spheres** Count 391
- **Pitch** 0.8 mm
- **Mass** 1.2g +/- 0.1g

SPACE KEY FEATURES

- **Space Qualification:**
  - **NASA** Level 1, 2 and 3
    (based on NASA EEE-INST-002 - Section M4 – PEMs)
  - **ECSS** Class 3 (ECSS-Q-ST-60-13C)
  - **X1** New Space Grades
- **Low outgassing:**
  - Compliant with ASTM 595 and ESCC-Q-ST-70-02
- **Radiation Tolerance**
  (complete radiation reports available on-demand)
  - **NASA** and **ECSS** Flight Models:
    - No destructive SEL LET up to 60 MeV.cm²/mg
    - TID target: 100 krad(Si)
    - SEE characterized up to 60 MeV.cm²/mg (target)
    - Protons characterized up to 200 MeV (target)
  - **Teledyne e2v X1 New Space** Grade Flight Models:
    - No destructive SEL LET up to 43 MeV.cm²/mg
    - TID target: 35 krad(Si)

An Important Notice at the end of this datasheet addresses availability, warranty, changes, use in critical applications, intellectual property matters and other important disclaimers.

Revision History

Date	Revision	Description
03/2026	I	Removed D1_ prefix removed on power signals, RTT(Static) replaced by RTT(Park): it is the same thing, §1.3 Design Considerations : Correction of Reset_N recommendation. §3 Ball Description: Table 6: Ball Description: • CK_t, CK_c, A10, A12: applied Note 1, • Parity bit direction correction, • Table 6: Ball Description: wrong VTT tolerance removed. Already detailed in Table 29: DC operating voltage (pod12), §4 Functional Block Diagram : Paragraph added §5 MECHANICAL OUTLINE - PACKAGE DETAILS: Drawing correction, §9.2.1 MCP Component Operating Temperature Range: Table 27: DRAM Component Operating Temperature Range: Note 3: • Removed Thermal resistance since simulation models are available and are highly recommended to use, • Note 3 a: Removed last sentence of "….1X refresh….": Wasn't relevant here. Will be explained in an Application Note later, §9.2.2 tREFI by Temperature: Table 28: tREFI by Temperature: added note 2, §9.4 DDR4 power consumption : Correction of leakage notion, §10.1 Speed Bins by Speed Grade • Speed Bins tables reformatted, • Correction of 1866MT/s speed bins: CL-nRCD-nRP, tAA, tRCD, tRP, tRAS, tRC, • Correction of 2133MT/s speed bins: CL-nRCD-nRP, tAA, tRCD, tRP, tRAS, tRC, Table 35 - Clock period jitter: typo: "Ps" replaced by "ps", Last page: Teledyne e2v postal address update, Removed Appendix 10. Will be an Application Note.
12/2024	H	DDR4 Timing Summary table removed (not relevant), now replaced by Table 4: backward compatibility Table 5: Addressing corrected: For Revision B 4GB, BG1 pin must be connected and Row Addressing Width must be 15bits (A0 to A14), Table 32: 1600MT/s Speed Bins and Operating Conditions was added Table 33, 34 and 35: respectively 1866, 2133 and 2400MT/s Speed Bins and Operating Conditions was updated (form factor).
10/2024	G.1	8.4 DDR4 power consumption was updated Table 35 was updated with 1866MT/s Timing Parameters + TRFC for 4 and 16 Gb was removed (not applicable) Ordering information E1 and E2 were removed + Orderable part was updated, mainly 2133MT/s was removed Table 29: VTT was added Table 3, 4 1866MT/s was added Table 32: "DDR4-1866 Speed Bins and Operating Conditions" was added Table 1: design guide for reset_n was clarified §5. Reset and power on ramping, was added
09/2024	G	Table 32 & 33 Speed bins update and table 34 timing update, TBD replaced by values, 1.3.2 Design guide: explanations reduced to essential, other recommendations moved to the User Guide document "DDR4T0xG72_General_User_Guide" (including trace length information), Added paragraph « 4.2 Weight », All 1866MHz characteristics removed (not applicable),

An Important Notice at the end of this datasheet addresses availability, warranty, changes, use in critical applications, intellectual property matters and other important disclaimers.

Date	Revision	Description
		All reference to TDQS_c and TDQS_t removed (not applicable).
06/2024	F.2	Chapter 1.5 / DDR4 SPEED BINs and Timing Summary: DDR4-1866 Speen Bin deleted Table 1 / DDR4 Design Guide: Additional information (± 5mils) added in Trace Lengths Table 5 / Addressing: Die Organization information removed (Export Controlled information) Table 5 / Corrections in BG Address lines & Row Address for 4GB Revision B: 512Mx72 Chapter 7.2 / Thermal considerations: Junction to case information added Chapter 7.2 / Thermal considerations: Combination of chapters 7.2.1 & 7.2.2 on Thermal conditions Table 27 / DRAM Component Operating Temperature Range: Some details added on Tc and Tj
01/2024	F.1	Update “4GB” and “8GB” to “Revision A” and “Revision B” Add Revision B in Ordering information Outgassing information confirmed on both revisions
07/2023	F	Change radiation tolerance sentence Add X1 reference in Ordering information Add note column on table 6 ball description Add 7.5 DDR4 power consumption
05/2023	E.1	“Proprietary and Confidential” removed
03/2022	E	Update with 8GB information and ordering Information
04/2021	D	Add Capacitors note Add Outgassing feature Preliminary” removed Add Mass Add Differential Clock Termination scheme Add DDR4P and Grade notes in “Ordering Information” Add new references in “orderable parts” SEU LET sensitivity Theshold changed to 2.6 MeV
09/2020	C	Temperature compensated refresh only operates on -40 to 105°C temperature range Update of mechanical outline and orderable parts list/table Add termination resistor value Correction of ball size from 0.5 to 0.4 mm
06/2020	B	Update of « Ordering Information » Add ball’s information; Add orderable parts Change TID target to 100krad Add die configuration and notes Add Mass for RoHS parts Change PadOut picture Add Parity pin
03/2020	A	Initial Baseline Release

An Important Notice at the end of this datasheet addresses availability, warranty, changes, use in critical applications, intellectual property matters and other important disclaimers.

Ordering Information

Product Name	Radiation Performance	DDR Size[3]	Bus width	Temperature Range[3]	Package Type[3]	Speed (MT/s)	Rev[1]	Grade[4][5]
DDR4[2]	T: Rad Tol	04G: 4 GByte 08G: 8 GByte	72: 72 bits	M: -55/125°C A: -40/105°C	ZR: PBGA Stacked Wire Bond (Leaded SnPb) ZS: PBGA Stacked Wire Bond (Leadfree RoHS)	1: 2133 2: 2400	A B	EM: Engineering Models EQM: Engineering Qualification Models -N1: Nasa Level 1 -N2: Nasa Level 2 -N3: Nasa Level 3 -E3: ECSS Class 3 -X1: Specific screening flow

Notes:

1. Revision A part is configured for x16 and Revision B part is configured for x8.
2. "DDR4**P**" prototypes are functional devices dedicated to particular uses. Please contact Teledyne e2v sales office to know more about it
3. For availability of the different versions, contact Teledyne e2v sales office.
4. To know more about grades please refer to NE60S220869 on our website (NE60S220869(B).pdf)
5. To know more about these following specifications and their screening flows, please contact us:

	Revision A	Revision B
NASA Space Grade Specification	SP 31S 219973	SP 31S 222554
ECSS Class 3 Space Grade Specification	SP 31S 221735	SP 31S 224319
X1 Specific Screening Flow Space Grade Specification	-	SP 31S 222691

Orderable Parts

	Revision A	Revision B
EM	**DDR4T04G72AZS2AEM**: 4GB [-40/105°C] ROHS 2400MT/s	**DDR4T08G72AZR2BEM:** 8GB [-40/105°C] Leaded SnPb 2400MT/s
		DDR4T04G72AZR2BEM: 4GB [-40/105°C] Leaded SnPb 2400MT/s
Space flow	**DDR4T04G72MZR2A-N1:** 4GB [-55/125°C] Leaded SnPb 2400MT/s	**DDR4T08G72AZR2BYYY[1]**: 8GB [-40/105°C] Leaded SnPb 2400MT/s
		DDR4T08G72MZR2BXXX[2]: 8GB [-55/125°C] Leaded SnPb 2400MT/s
		DDR4T04G72AZR2BYYY[1]: 4GB [-40/105°C] Leaded SnPb 2400MT/s
		DDR4T04G72MZR2BXXX[2]: 4GB [-55/125°C] Leaded SnPb 2400MT/s

Notes:

1. "YYY" should be replaced by Grades: EQM, -N1, -N2, -N3, -E3, -X1
2. "XXX" should be replaced by Grades: EQM, -N1, -N2, -N3

An Important Notice at the end of this datasheet addresses availability, warranty, changes, use in critical applications, intellectual property matters and other important disclaimers.

Table of Contents

1 Introduction 7
1.1 Features 7
1.2 Benefits 8
1.3 Design Considerations 8
1.4 DDR4 SPEED BINs and Timing Summary 9
1.5 Addressing 9
2 DDR4 MCP Ball Assignments 10
2.1 MCP Data Byte Ball Assignments (Revision A/Revision B) 10
3 Ball Description 11
4 Functional Block Diagram 13
4.1 FUNCTIONAL BLOCK DIAGRAM – Revision A 13
4.2 FUNCTIONAL BLOCK DIAGRAM – Revision B 14
5 MECHANICAL OUTLINE - PACKAGE DETAILS 15
5.1 Dimensions 15
5.2 Weight 15
6 Power up and initialization sequence 16
7 DDR4 MODE REGISTERS 17
7.1 Programming Mode Registers 17
7.1.1 tMRD Timing Diagram 18
7.1.2 tMOD Timing Diagram 19
7.2 MODE REGISTER 0 20
7.2.1 Burst Length, Type, and Order 22
7.2.2 CAS Latency 22
7.2.3 Test Mode 23
7.2.4 Write Recovery(WR)/READ-to-PRECHARGE 23
7.2.5 DLL RESET 23
7.3 MODE REGISTER 1 23
7.3.1 DLL Enable/DLL Disable 24
7.3.2 Output Driver Impedance Control 25
7.3.3 ODT RTT(NOM) Values 25
7.3.4 Additive Latency 25
7.3.5 Write Leveling 25
7.3.6 Output Disable 25
7.4 MODE REGISTER 2 26
7.4.1 CAS WRITE Latency 27
7.4.2 Low-Power Auto Self Refresh 27
7.4.3 Dynamic ODT 28
7.4.4 Write Cyclic Redundancy Check Data Bus 28
7.4.5 Target Row Refresh Mode 28
7.5 MODE REGISTER 3 28
7.5.1 Multipurpose Register 30
7.5.2 WRITE Command Latency When CRC/DM is Enabled 30

An Important Notice at the end of this datasheet addresses availability, warranty, changes, use in critical applications, intellectual property matters and other important disclaimers.

7.5.3 Fine Granularity Refresh Mode 30
7.5.4 Temperature Sensor Status 30
7.5.5 Per-DRAM Addressability 30
7.5.6 Gear-Down Mode 30
7.6 MODE REGISTER 4 31
7.6.1 Post Package Repair Mode 32
7.6.2 Soft Post Package Repair Mode 32
7.6.3 WRITE Preamble 32
7.6.4 READ Preamble 33
7.6.5 READ Preamble Training 33
7.6.6 Temperature-Controlled Refresh 33
7.6.7 Command Address Latency 33
7.6.8 Internal VREF Monitor 33
7.6.9 Maximum Power Savings Mode 33
7.7 MODE REGISTER 5 34
7.7.1 Data Bus Inversion 35
7.7.2 Data Mask 35
7.7.3 CA Parity Persistent Error Mode 35
7.7.4 ODT Input Buffer for Power-Down 36
7.7.5 CA Parity Error Status 36
7.7.6 CRC Error Status 36
7.7.7 CA Parity Latency Mode 36
7.8 MODE REGISTER 6 37
7.8.1 t_{CCD_L} Programming 38
7.8.2 VREFDQ Calibration Enable 38
7.8.3 VREFDQ Calibration Range 38
7.8.4 VREFDQ Calibration Value 38
8 DQ Internal Vref Specifications 38
8.1 VREFDQ Calibration and Training 38
8.1.1 VREFDQ Voltage Range 39
8.1.2 VREFDQ Range and Levels 39
8.1.3 VREFDQ Step Size 40
8.1.4 VREFDQ Increment and Decrement Timing 41
8.1.5 VREFDQ Target Settings 45
9 DC OPERATING CONDITIONS AND CHARACTERISTICS 45
9.1 ABSOLUTE MAXIMUM RATINGS 45
9.2 Thermal considerations 46
9.2.1 MCP Component Operating Temperature Range 46
9.2.2 tREFI by Temperature 46
9.3 DC OPERATING VOLTAGE 47
9.4 DDR4 power consumption 48
10 AC OPERATING CONDITIONS AND CHARACTERISTICS 49
10.1 Speed Bins by Speed Grade 49

An Important Notice at the end of this datasheet addresses availability, warranty, changes, use in critical applications, intellectual property matters and other important disclaimers.

1 INTRODUCTION

1.1 Features

- JEDEC Standard Power Supply
  - VDD = 1.2V ± 5% (VDDQ is internally connected to VDD)
  - External VPP = 2.5 Volt +10%, -5%
- 391 ball MCP
- 1.2V Pseudo-open drain I/O (POD12) DQ lines
- Internally generated VrefDQ
- 72 bit data path: 64+8 bit for ECC implementation
- Programmable CAS Latency: 15,17
- Programmable CAS Write Latency (CWL)
- Programmable Additive Latency (Posted CAS)
- Per DRAM addressability is supported
- Data Bus Inversion support for x8 and x16 devices
- Command/Address (CA) Parity
- On-chip CA Parity detection for the CA bus
- Databus write cyclic redundancy check (CRC)
- Output Driver Calibration
- Reduced interconnect routing
- Reduced trace lengths due to the highly integrated, impedance matched packaging
- Thermally enhanced packaging technology allows silicon integration without performance degradation due to power dissipation (heat)
- Selectable Fixed burst chop of 4 (BC4) and burst length of 8 (BL8) on-the-fly (OTF) via the mode register set (MRS)
- 8n prefetch with:
- Revision A: 2 bank groups: 8 banks (2 bank groups x 4 banks per bank group)
- Revision B: 4 bank groups: 16 banks (4 bank groups x 4 banks per bank group)
- Separate activation, read, write, refresh operations for each bank group
- 7 mode registers
- Dynamic On-Die-Termination (ODT) and ODT Park for improved signal integrity
- Self Refresh, Self Refresh abort and several Power Down Modes
- DLL-off mode for power savings
- System Level Timing Calibration Support via Write Leveling and Multi Purpose Register (MPR) Read Pattern
- Asynchronous Reset
- Bidirectional Differentially Buffered Data Strobes
- SnPb and RoHS compliant package available

Notes:

1. Refer to ‘table 2’ and ‘table 5’ for more details on the differences between the various memory versions
2. ECC uses only the lower byte of the x16 die, the upper byte is not connected

An Important Notice at the end of this datasheet addresses availability, warranty, changes, use in critical applications, intellectual property matters and other important disclaimers.

1.2 Benefits

- Very small footprint: saves board space versus implementation with discrete components
- Very high memory capacity per cubic inch
- Very high memory bandwidth per cubic inch
- Rugged: soldered-down PBGA
- Superior signal integrity
- 0.8 mm pitch: leadfree and leaded ball options
- Suitability for use in High-Rel and Space applications requiring Mil-Temp range, small form factor, non-hermetic operation.

1.3 Design Considerations

DDR4 MCP is designed following JEDEC79-4D. Design rules examples can be found in JEDEC standard JESD21C “DDR4 UDIMM Design specification”.

Teledyne dedicated user guide “DDR4T0xG72_General_User_Guide” is available on request.

Table 1: DDR4 Design Guide

Item	Description	Implementation Suggestion
Placement	DDR4 Interface between MCP & Host / Memory Controller	The MCP should be placed as close as possible to the processor/memory controller, with direct / straight interconnect between them.
Command address Rtt Termination	Termination for DDR4 address/command/control signals	No external termination required; all termination resistors are implemented in MCP package. The nominal value of the termination resistors is 69.8 Ω.
Differential Clock Termination	Clock Termination for DDR differential clock input signal	No external termination required; all termination resistors are implemented in MCP package.
RESET_n	Reset Signal	Refer to the Teledyne "AN 60S 225984 DDR4TxxG72 General User Guide". For more details about reset and power sequence, see §6 Power up and initialization sequence.
ALERT_n	Alert signal	No external termination required (internally pulled-up to VDD with a 51Ω resistor).
Decoupling	High Speed Decoupling	The MCP incorporates some decoupling capacitors. For recommended external decoupling scheme please refer to the Teledyne "AN 60S 225984 DDR4TxxG72 General User Guide".
Bulk Decoupling	Low speed / low frequency	For recommended external decoupling scheme please refer to the Teledyne "AN 60S 225984 DDR4TxxG72 General User Guide".
Thermal	Thermal management	Customer should perform thermal simulation of device in application to determine appropriate thermal mitigation techniques required to ensure device case temperature maximum is not exceeded. Typical thermal mitigation techniques that may be required include heat sinks and/or PCB design enhancements such as thermal vias, heavier power and ground planes, etc.
Trace impedance	Impedance	Follow Controller Guide or Teledyne "AN 60S 225984 DDR4TxxG72 General User Guide".
Trace Lengths	Data Byte Lanes	Follow Controller Guide or Teledyne "AN 60S 225984 DDR4TxxG72 General User Guide".
Trace Lengths	Address & Command	Follow Controller Guide or Teledyne "AN 60S 225984 DDR4TxxG72 General User Guide".
Calibration	ZQ resistor for drive strength calibration	Nine individuals pull down 240Ω +/- 1% resistors are required, one per each ZQ pin (ZQ0...8).

An Important Notice at the end of this datasheet addresses availability, warranty, changes, use in critical applications, intellectual property matters and other important disclaimers.

Item	Description	Implementation Suggestion
BG1 - 8GB capacity support	Future migration to support 8GB capacity	BG1 is not used in Revision A memory design, however it is recommended to connect it to host memory controller for future compatibility with Revision B memories.
Signal Integrity Simulation	End to End Simulation of all I/O signals	It is recommended to perform a signal integrity simulation on final layout design.
Simulation Model	MCP Package, Die Models	Simulation models are available on request.
Power consumption	Power calculation spreadsheet	Power calculation spreadsheet is available on request.
Thermal Simulation Model	MCP thermal model	Thermal simulation models are available on request.

Table 2: Migration from Revision A to Revision B

Signal	Implementation
BG1	To support future migration to Revision B part, this signal should be connected to the Host / Memory Controller. All other signals are applicable for both capacities. BG1 signal is not used in Revision A parts.
ZQ0 thru ZQ8	Calibration Reference - To support migration to Revision B part, connect all 9 ZQx signals to GND via 240Ω 1% Resistor and install them. ZQ1, ZQ3, ZQ5, ZQ7 signals are not used in Revision A parts.

1.4 DDR4 SPEED BINs and Timing Summary

Table 3: DDR4 SPEED BIN Nomenclature

Speed	Clock
2400 MT/s	1200 MHz

Table 4 : Backward Compatibility

Ordered speed bin	Supported speed bin [MT/s]			
DDR4-2400	1600	1866	2133	2400

1.5 Addressing

Table 5: Addressing

		4GB Rev. A: 512Mx72	4GB Rev. B: 512Mx72	8GB Rev. B: 1024Mx72
Bank Address	# of Bank Groups	2	4	4
	BG Address	BG0 (BG1 is internally not connected)	BG0, BG1	BG0, BG1
	Bank Address in a BG	BA0 to BA1	BA0 to BA1	BA0 to BA1
Bank Count per Group		4	4	4
Row Address		64K (A0 to A15)	32K (A0 to A14)	64K (A0 to A15)
Column Address		1K (A0 to A9)	1K (A0 to A9)	1K (A0 to A9)
MCP Rank Address		CS0_n	CS0_n	CS0_n
Page size		2K	1K	1K

An Important Notice at the end of this datasheet addresses availability, warranty, changes, use in critical applications, intellectual property matters and other important disclaimers.

2 DDR4 MCP BALL ASSIGNMENTS

2.1 MCP Data Byte Ball Assignments (Revision A/Revision B)

Top view, A1 top left corner

	1	2	3	4	5	6	7	8	9	10	11	12	13	14	15	16	17
A	VPP	GND	VDD	GND	VDD	GND	DQ30	GND	VDD	GND	DQ25	GND	DQ22	GND	DQ19	DQ17	GND
B	GND	NC	GND	NC	VDD	NC	DQ28	GND	DQ29	GND	DQ27	VDD	DQ20	GND	DQ16	VDD	DQS2_c
C	NC	NC	NC	NC	GND	NC	NC	GND	DQ31	ZQ2	DQ26	DQS3_t	DQ23	DQ21	DQ18	GND	DQS2_t
D	NC	NC	NC	NC	NC	GND	NC	VDD	DQ24	ZQ3	DM3_n /DBI3_	DQS3_c	NC	GND	VDD	DM2_n /DBI2_	GND
E	NC	NC	GND	NC	NC	NC	GND	GND	VDD	GND	VDD	GND	DQ15	VDD	GND	DQ9	VPP
F	NC	NC	NC	NC	GND	NC	NC	VDD	DQ3	ZQ1	GND	DQS0_c	DQ12	GND	DQ10	GND	DQS1_t
G	NC	NC	NC	NC	GND	NC	DQ7	VDD	DQ2	ZQ0	DM0_n /DBI0_	DQS0_t	DQ13	VDD	DQ8	VDD	DQS1_c
H	GND	VDD	GND	VDD	VDD	GND	DQ4	GND	DQ5	ZQ8	DQ1	VDD	DQ14	GND	DQ11	DM1_n /DBI1_	GND
J	VTT	GND	VDD	GND	VDD	VDD	DQ6	NC	GND	NC	DQ0	GND	CB7	CB5	DM8_n /DBI8_	CB1	DQS8_t
K	VDD	GND	GND	VDD	GND	VDD	GND	NC	CB6	NC	CB3	GND	CB4	CB2	GND	CB0	DQS8_c
L	A13	A9	ALERT_ n	A6	TEN	BA1	BG0	NC	A12/BC _n	NC	ACT_n	A14/W E_n	CS0_n	VDD	GND	VDD	VTT
M	A11	GND	A7	A1	RESET_ n	A4	GND	NC	VREFCA	NC	GND	A16/RA S_n	ODT0	CK0_c	CK0_t	GND	VTT
N	PARITY	A2	A8	A0	A5	A3	BA0	NC	A10/AP	NC	BG1	A15/CA S_n	CKE0	VDD	GND	VDD	VTT
P	VDD	GND	GND	VDD	GND	VDD	GND	NC	NC	NC	NC	GND	NC	NC	GND	NC	NC
R	VTT	GND	VDD	GND	VDD	VDD	DQ62	NC	GND	NC	DQ59	GND	NC	NC	NC	NC	NC
T	GND	VDD	GND	VDD	VDD	GND	DQ60	GND	DQ61	NC	DQ57	VDD	DQ54	GND	DQ51	DM6_n /DBI6_	GND
U	NC	NC	NC	NC	GND	NC	DQ63	VDD	DQ58	ZQ6	DQ52	DQ53	DQ55	VDD	DQ48	VDD	DQS6_c
V	NC	NC	NC	NC	GND	NC	NC	VDD	DQ56	ZQ7	GND	DM7_n /DBI7_	DQS7_t	GND	DQ50	GND	DQS6_t
W	NC	NC	GND	NC	NC	NC	GND	GND	VDD	GND	VDD	GND	DQS7_c	VDD	GND	DQ49	VPP
Y	NC	NC	NC	NC	NC	GND	NC	VDD	DQ39	ZQ5	DQ34	DQS4_c	NC	GND	VDD	DM5_n /DBI5_	GND
AA	NC	NC	NC	NC	GND	NC	NC	GND	DQ32	ZQ4	DM4_n /DBI4_	DQS4_t	DQ47	DQ45	DQ42	GND	DQS5_t
AB	GND	NC	GND	NC	VDD	NC	DQ38	GND	DQ37	GND	DQ33	VDD	DQ46	GND	DQ40	VDD	DQS5_c
AC	VPP	GND	VDD	GND	VDD	GND	DQ36	GND	VDD	GND	DQ35	GND	DQ44	GND	DQ43	DQ41	GND

DataByte 0
DataByte 0
DataByte 1
DataByte 2
DataByte 3
DataByte 4
DataByte 5
DataByte 6
DataByte 7
ECC Byte
Clock
Address
Bank Group
Miscellaneous
Ground / VSS
VREFCA
VDD
VPP
VTT
ZQ
TEN
No Connect

An Important Notice at the end of this datasheet addresses availability, warranty, changes, use in critical applications, intellectual property matters and other important disclaimers.

3 BALL DESCRIPTION

- Number of solder balls: 391
- Ball diameter: 0.4 mm
- Pitch: 0.80 mm
- Solder balls for leaded option: 63%Sn, 37%Pb
- Solder balls for Lead-free RoHS option: 96.5%Sn, 3%Ag, 0.5%Cu

Table 6: Ball Description

Symbol	Type	Function	Note
CK_t, CK_c	Input	Clock: CK_t and CK_c are differential clock inputs. All address and control input signals are sampled on the crossing of the positive edge of CK_t and negative edge of CK_c.	1
CKE0	Input	Clock Enable: CKE0 HIGH activates, and CKE0 Low deactivates, internal clock signals and device input buffers and output drivers. Taking CKE0 Low provides Precharge Power-Down and Self-Refresh operation (all banks idle), or Active Power-Down (row Active in any bank). CKE0 is asynchronous for Self-Refresh exit. After VREFCA and VREFDQ have become stable during the power on and initialization sequence, they must be maintained during all operations (including Self-Refresh). CKE must be maintained high throughout read and write accesses. Input buffers, excluding CK, CK_c, ODT and CKE0, are disabled during power-down. Input buffers, excluding CKE0, are disabled during Self-Refresh.	1
CS0_n	Input	Chip Select: All commands are masked when CS0_n is registered HIGH. CS0_n provides for external Rank selection on systems with multiple Ranks. CS0_n is considered part of the command code.	1
ODT0	Input	On Die Termination: ODT0 (registered HIGH) enables termination resistance internal to the DDR4 SDRAM. When enabled, ODT0 is only applied to each DQ, DQS_t, DQS_c and DM_n/DBI_n, NU. For x16 configuration ODT0 is applied to each DQ, DQSU_c, DQSU_t, DQSL_t, DQSL_c, DMU_n, and DML_n signal. The ODT0 ball will be ignored if MR1 is programmed to disable RTT_NOM.	1
PARITY	Input	Parity for command and address: This function can be enabled or disabled via the mode register. When enabled, the parity signal covers all command and address inputs, including ACT_n, RAS_n/A16, CAS_n/A15, WE_n/A14, A[17;0], A10/AP, A12/BC_n, BA[1;0] and BG[1;0] with C0, C1 and C2 on 3DS only devices. Control pins NOT covered by the parity signal are CS_n, CKE, and ODT. Unused address pins that are density and configuration specific should be treated internally as 0s by the DRAM pariy logic. Command and address inputs will have parity check performed when commands are latched via the rising edge of CK_t and when CS_n is LOW.	1
ACT_n	Input	Activation Command Input: ACT_n defines the Activation command being entered along with CS0_n. The input into RAS_n/A16, CAS_n/A15 and WE_n/A14 will be considered as Row Address A16, A15 and A14.	1
RAS_n/A16, CAS_n/A15, WE_n/A14	Input	Command Inputs RAS_n/A16, CAS_n/A15 and WE_n/A14 (along with CS0_n) define the command being entered. Those balls have multi-function. For example, for activation with ACT_n Low, those are Addressing like A16,A15 and A14 but for non-activation command with ACT_n High, those are Command balls for Read, Write and other command defined in command truth table.	1
DM_n/DBI_n, (DMU_n/DBIU_n), (DML_n/DBIL_n)	Input/ Output	Input Data Mask and Data Bus Inversion: DM_n is an input mask signal for write data. Input data is masked when DM_n is sampled LOW coincident with that input data during a Write access. DM_n is sampled on both edges of DQS. DM is muxed with DBI function by Mode Register A10, A11, A12 setting in MR5. For x8 device, the function of DM is enabled by Mode Register A11 setting in MR1. DBI_n is an input/output identifying whether to store/output the true or inverted data. If DBI_n is LOW, the data will be stored/output after inversion inside the DDR4 SDRAM and not inverted if DBI_n is HIGH.	
BG0 - BG1	Input	Bank Group Inputs: BG0 - BG1 define to which bank group an Active, Read, Write or Precharge command is being applied. BG0 also determines which mode register is to be accessed during a MRS cycle. Revision A (x16) Has only BG0 (BG1 is internally not connected). Revision B (x8) BG0 and BG1 must be connected to the Host / Memory Controller.	1

An Important Notice at the end of this datasheet addresses availability, warranty, changes, use in critical applications, intellectual property matters and other important disclaimers.

Symbol	Type	Function	Note
BA0 - BA1	Input	Bank Address Inputs: BA0 - BA1 define to which bank an Active, Read, Write or Precharge command is being applied. Bank address also determines if the mode register or extended mode register is to be accessed during a MRS cycle.	1
A0-A13, A17	Input	Address Inputs: Provided the row address for ACTIVATE Commands and the column address for Read/Write commands to select one location out of the memory array in the respective bank. (A10/AP, A12/BC_n, RAS_n/A16, CAS_n/A15 and WE_n/A14 have additional functions, see other rows. The address inputs also provide the op-code during Mode Register Set commands. A17 is not used, left open or connected to ground.	1
A10 / AP	Input	Auto-precharge: A10 is sampled during Read/Write commands to determine whether Autoprecharge should be performed to the accessed bank after the Read/Write operation. (HIGH: Autoprecharge; LOW: no Autoprecharge).A10 is sampled during a Precharge command to determine whether the Precharge applies to one bank (A10 LOW) or all banks (A10 HIGH). If only one bank is to be precharged, the bank is selected by bank addresses.	1
A12 / BC_n	Input	Burst Chop: A12 / BC_n is sampled during Read and Write commands to determine if burst chop (on-the-fly) will be performed. (HIGH, no burst chop; LOW: burst chopped). See command truth table for details.	1
RESET_n	Input	Active Low Asynchronous Reset: Reset is active when RESET_n is LOW, and inactive when RESET_n is HIGH. RESET_n must be HIGH during normal operation. RESET_n is a CMOS rail to rail signal with DC high and low at 80% and 20% of VDD.	
DQ<63:00>	Input / Output	Data Input/ Output: Bi-directional data bus. If CRC is enabled via Mode register then CRC code is added at the end of Data Burst. Any DQ from DQ0toDQ3 may indicate the internal Vref level during test via Mode Register Setting MR4 A4=High. Refer to vendor specific datasheets to determine which DQ is used.	
CB<7:0>	Input / Output	Check Bit Input/ Output: Bi-directional ECC portion of data bus for x72 configurations	
DQS_t, DQS_c, DQSU_t, DQSU_c, DQSL_t, DQSL_c	Input / Output	Data Strobe: output with read data, input with write data. Edge-aligned with read data, centered in write data. For x16, DQSL corresponds to the data on DQL0-DQL7; DQSU corresponds to the data on DQU0-DQU7. The data strobe DQS_t, DQSL_t, and DQSU_t are paired with differential signals DQS_c, DQSL_c, and DQSU_c, respectively, to provide differential pair signaling to the system during reads and writes. DDR4 SDRAM supports differential data strobe only and does not support single-ended.	
ALERT_n	Output	Alert: It has multi functions such as CRC error flag, Command and Address Parity error flag. If there is error in CRC, then Alert_n goes LOW for the period time interval and goes back HIGH. IF there is error in Command Address Parity Check, then Alert_n goes LOW for relatively long period until on going DRAM internal recovery transaction to complete. This signal is internally pulled-up to VDD with a 51Ω resistor. No external resistor is required.	1
TEN	Input	Boundary Scan Mode Enable: Required on x16 devices and optional input on x8 with densities equal to or greater than 8Gb. HIGH in this ball will enable boundary scan operation along with other balls. It is a CMOS rail to rail signal with DC high and low at 80% and 20% of VDD.	
NC		No Connect: No internal electrical connection is present.	
VDD	Supply	Power Supply: 1.2 V +/- 0.06 V	
GND	Supply	Ground	
VTT	Supply	Power Supply: 0.6 V	
Vpp	Supply	DRAM Activation Power Supply: 2.5V	
VREFCA	Supply	Reference voltage for CA	
ZQ	Supply	Reference Ball for ZQ calibration	

Note:

1. No external termination required on the following balls: CK_t, CK_n, BG0-BG1, BA0-BA1, A0-A17, ACT_n, RAS_n,/A16, CAS_n/A15, WE_n/A14, PARITY, CS_n, CKE, ODT, ALERT_n.

An Important Notice at the end of this datasheet addresses availability, warranty, changes, use in critical applications, intellectual property matters and other important disclaimers.

4 FUNCTIONAL BLOCK DIAGRAM

4.1 FUNCTIONAL BLOCK DIAGRAM – Revision A

Figure 1: FUNCTIONAL BLOCK DIAGRAM – Revision A

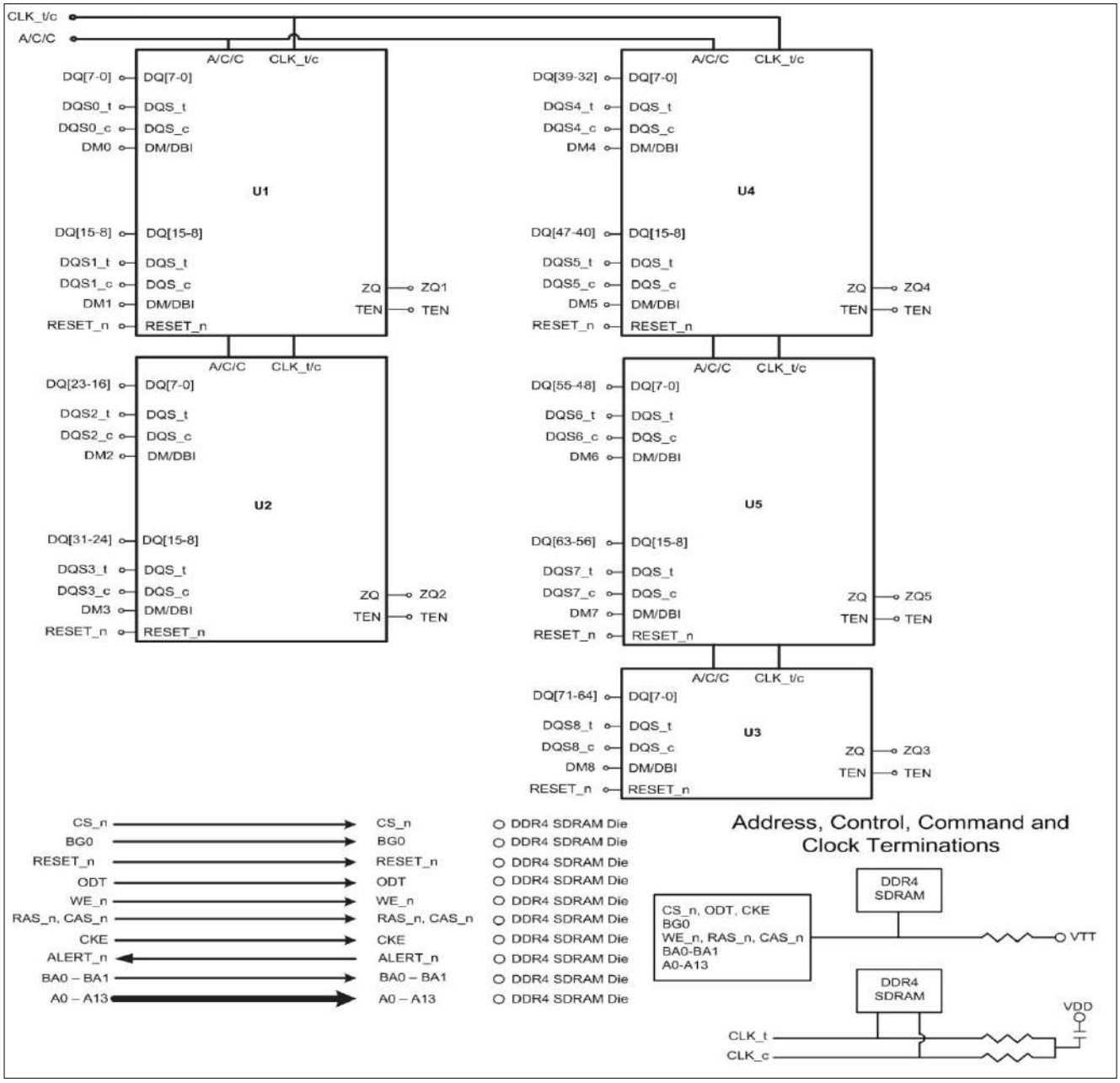

Notes:

1. Address, Control, Command and Clock Terminations are included,
2. Calibration resistors are not included,
3. RESET_n pin is not pulled up,
4. ALERT_n is pulled up to VDD.

An Important Notice at the end of this datasheet addresses availability, warranty, changes, use in critical applications, intellectual property matters and other important disclaimers.

4.2 FUNCTIONAL BLOCK DIAGRAM – Revision B

Figure 2: FUNCTIONAL BLOCK DIAGRAM – Revision B

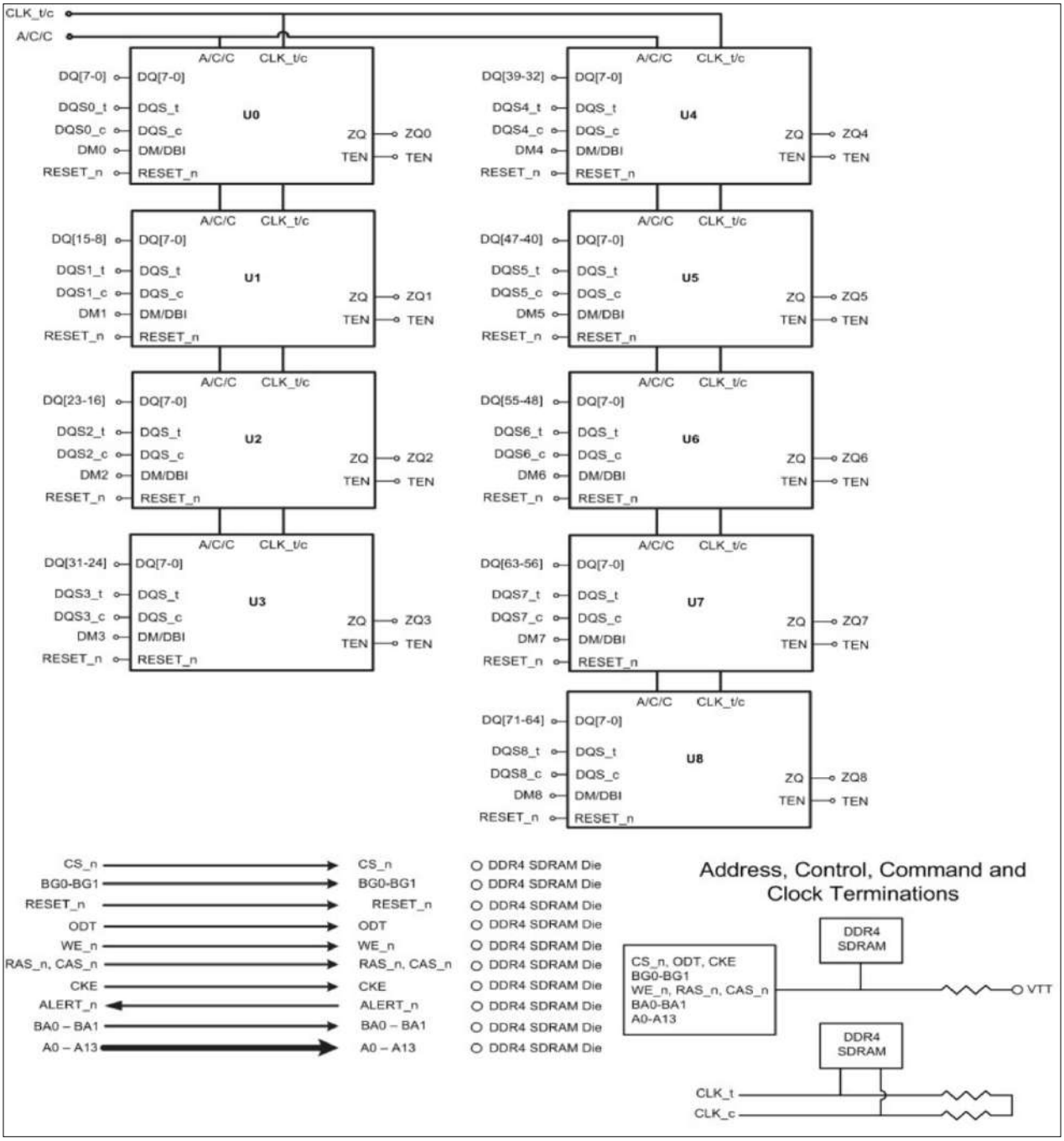

Notes:

1. Address, Control, Command and Clock Terminations are included,
2. Calibration resistors are not included,
3. RESET_n pin is not pulled up,
4. ALERT_n is pulled up to VDD.

An Important Notice at the end of this datasheet addresses availability, warranty, changes, use in critical applications, intellectual property matters and other important disclaimers.

5 MECHANICAL OUTLINE - PACKAGE DETAILS

5.1 Dimensions

Figure 3: Mechanical Outline - Package Details

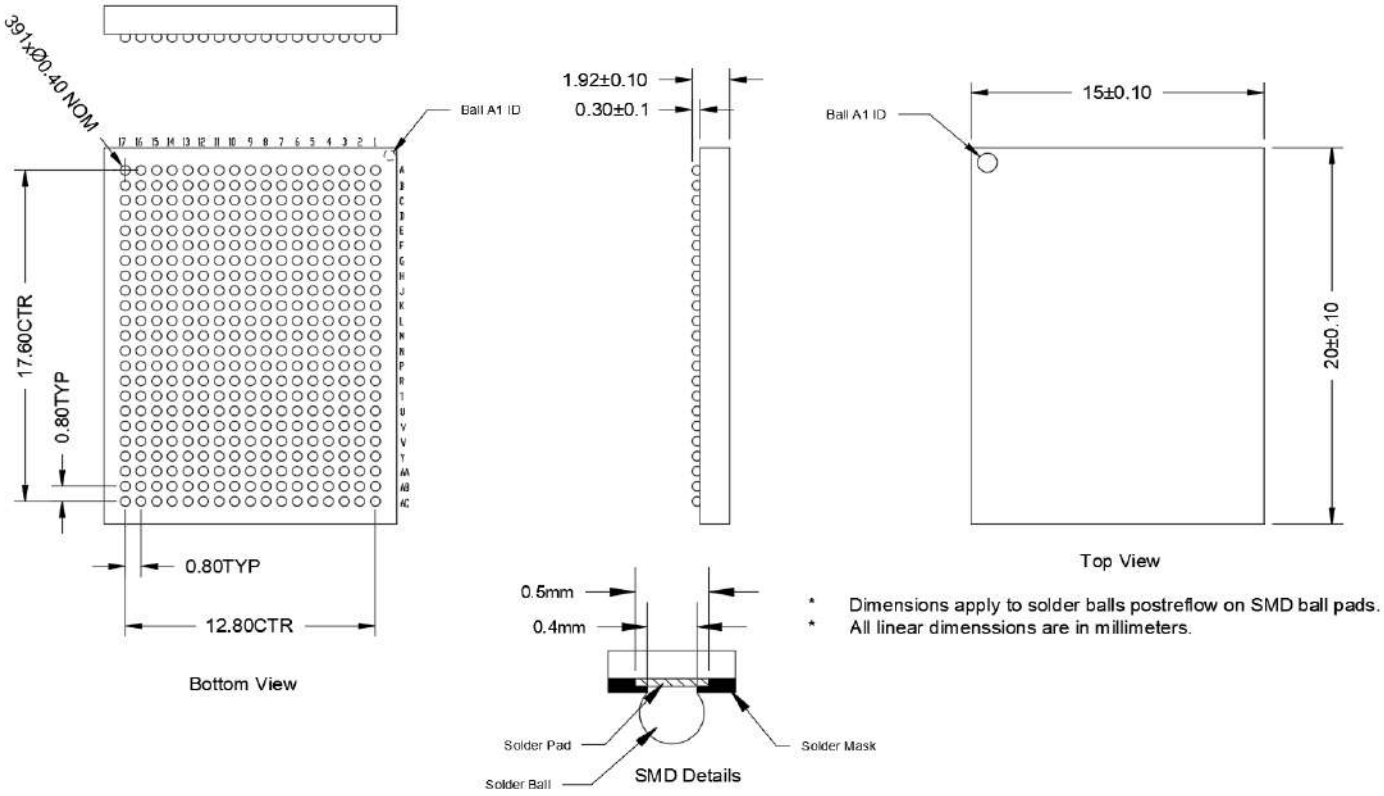

5.2 Weight

The weight is:

- Revision A parts: 1.18 grams
- Revision B parts: 1.27 grams

An Important Notice at the end of this datasheet addresses availability, warranty, changes, use in critical applications, intellectual property matters and other important disclaimers.

6 POWER UP AND INITIALIZATION SEQUENCE

For power-up initialization, RESET_n and TEN should be maintained below 0.2 x VDD while supplies ramp up; all other inputs may be undefined.

When supplies have ramped to a valid stable level, RESET_n must be maintained below 0.2 x VDD for a minimum of tPW_RESET_L and TEN must be maintained below 0.2 x VDD for a minimum of 700µs. CKE is pulled LOW anytime before RESET_n is de-asserted (minimum time of 10ns). The power voltage ramp time between 300mV to VDD, min must be no greater than 200ms, and during the ramp. VPP must ramp at the same time or up to 10 minutes prior to VDD, and VPP must be equal to or higher than VDD at all times. The total time for which VPP is powered and VDD is unpowered should not exceed 360 cumulative hours. After VDD has ramped and reached a stable level, RESET_n must go high within 10 minutes. After RESET_n goes high, the initialization sequence must be started within 3 seconds. For debug purposes, the 10 minute and 3 second delay limits may be extended to 60 minutes each provided the DRAM is operated in this debug mode for no more than 360 cumulative hours.

The power-up sequence should follow the order of the next steps:

- Apply VPP without any slope reversal before or at the same time as VDD,
- Apply VDD without any slope reversal before or at the same time as VTT and VREFCA,
- The voltage levels on all balls other than VDD, GND must be less than or equal to VDD on one side and must be greater than or equal to GND on the other side,
- VTT is limited to 0.76V MAX when the power ramp is complete (but normal operation should be 0.6V on VTT),
- VREFCA tracks VDD/2.

In addition to the power-up sequence, the following supplies slew rate / rise time limits apply:

Table 7 : Slew rate and rise time limits for supplies.

Symbol	Min	Max	Unit	Comment
V_{DD}_SL, V_{PP}_SL	0.004	600	V/ms	Measured between 300mV and 80% of supply minimum
V_{DD}_ona	N/A	200	ms	VDD maximum ramp time from 300mV to VDD minimum

An Important Notice at the end of this datasheet addresses availability, warranty, changes, use in critical applications, intellectual property matters and other important disclaimers.

7 DDR4 MODE REGISTERS

7.1 Programming Mode Registers

For application flexibility, various functions, features, and modes are programmable in seven mode registers (MRn) provided by the device as user defined variables that must be programmed via a MODE REGISTER SET (MRS) command. Because the default values of the mode registers are not defined, contents of mode registers must be fully initialized and/or re-initialized; that is, they must be written after power-up and/or reset for proper operation. The contents of the mode registers can be altered by re-executing the MRS command during normal operation. When programming the mode registers, even if the user chooses to modify only a sub-set of the MRS fields, all address fields within the accessed mode register must be redefined when the MRS command is issued. MRS and DLL RESET commands do not affect array contents, which means these commands can be executed any time after power-up without affecting the array contents. The MRS command cycle time, tMRD, is required to complete the WRITE operation to the mode register and is the minimum time required between the two MRS commands shown in the tMRD Timing figure. Some of the mode register settings affect address/command/control input functionality. In these cases, the next MRS command can be allowed when the function being updated by the current MRS command is completed. These MRS commands don't apply tMRD timing to the next MRS command; however, the input cases have unique MR setting procedures, so refer to individual function descriptions:

- Gear-down mode,
- Per-DRAM addressability,
- Maximum power saving mode,
- CS to command/address latency,
- CA parity latency mode,
- VREFDQ training value,
- VREFDQ training mode,
- VREFDQ training range.

Some mode register settings may not be supported because they are not required by certain speed bins.

An Important Notice at the end of this datasheet addresses availability, warranty, changes, use in critical applications, intellectual property matters and other important disclaimers.

7.1.1 tMRD Timing Diagram

Figure 4: tMRD Timing

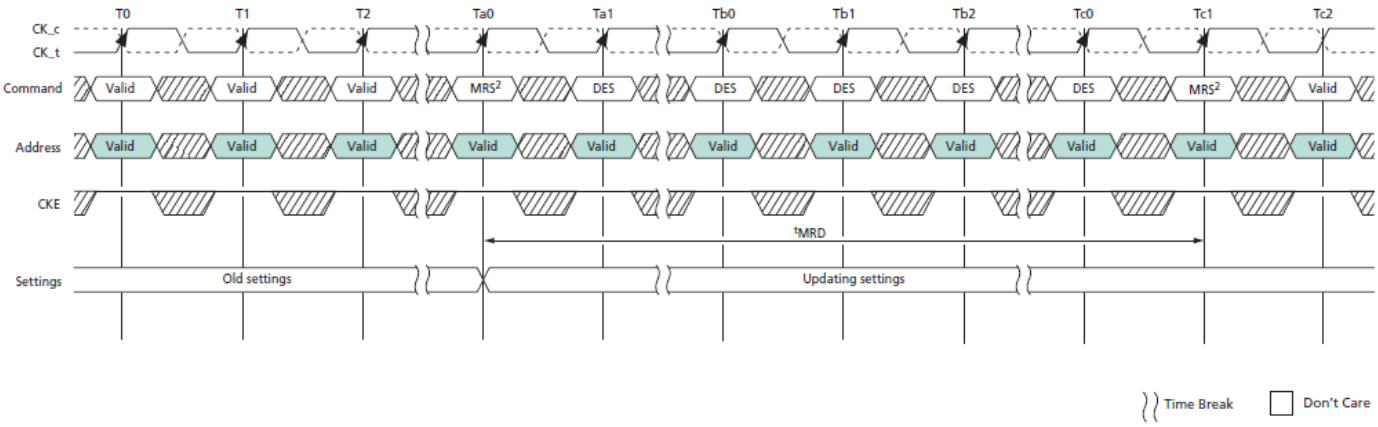

Notes:

1. This timing diagram depicts CA parity mode "disabled" case.
2. tMRD applies to all MRS commands with the following exceptions:
   a. Gear-down mode
   b. CA parity mode
   c. CAL mode
   d. Per-DRAM addressability mode
   e. VREFDQ training value, VREFDQ training mode, and VREFDQ training range

The MRS command to nonMRS command delay, tMOD, is required for the DRAM to update features, except DLL RESET. tMOD is the minimum time required from an MRS command to a nonMRS command, excluding DES, as shown in the tMOD Timing figure.

An Important Notice at the end of this datasheet addresses availability, warranty, changes, use in critical applications, intellectual property matters and other important disclaimers.

7.1.2 tMOD Timing Diagram

Figure 5: tMOD Timing

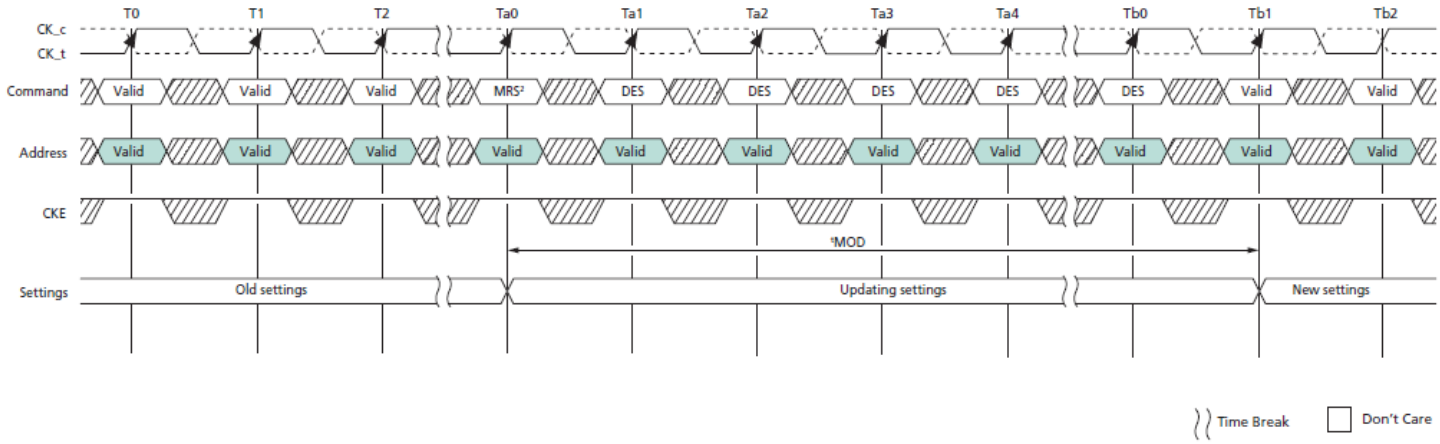

Notes:

1. This timing diagram depicts CA parity mode "disabled" case.
2. tMOD applies to all MRS commands with the following exceptions:
   a. DLL enable, Gear-down mode
   b. VREFDQ training value, internal VREF training monitor, VREFDQ training mode, and VREFDQ training range
   c. Maximum power savings mode, Per-DRAM addressability mode, and CA parity mode

The mode register contents can be changed using the same command and timing requirements during normal operation as long as the device is in idle state; that is, all banks are in the precharged state with tRP satisfied, all data bursts are completed, and CKE is HIGH prior to writing into the mode register. If the RTT(NOM) feature is enabled in the mode register prior to and/or after an MRS command, the ODT signal must continuously be registered LOW, ensuring RTT is in an off state prior to the MRS command. The ODT signal may be registered HIGH after tMOD has expired. If the RTT(NOM) feature is disabled in the mode register prior to and after an MRS command, the ODT signal can be registered either LOW or HIGH before, during, and after the MRS command. The mode registers are divided into various fields depending on functionality and modes. In some mode register setting cases, function updating takes longer than tMOD. This type of MRS does not apply tMOD timing to the next valid command, excluding DES. These MRS command input cases have unique MR setting procedures, so refer to individual function descriptions.

An Important Notice at the end of this datasheet addresses availability, warranty, changes, use in critical applications, intellectual property matters and other important disclaimers.

7.2 MODE REGISTER 0

Mode register 0 (MR0) controls various device operating modes as shown in the following register definition table. Not all settings listed may be available on a die; only settings required for speed bin support are available. MR0 is written by issuing the MRS command while controlling the states of the BG*x*, BA*x*, and A*x* address pins. The mapping of address pins during the MRS command is shown in the following MR0 Register Definition table.

Table 8: Address Pin Mapping

Address Pin Mapping																					
Address bus	BG1	BG0	BA1	BA0	A17	RAS_n	CAS_n	WE_n	A13	A12	A11	A10	A9	A8	A7	A6	A5	A4	A3	A2	A1	A0
Mode register	21	20	19	18	17	–	–	–	13	12	11	10	9	8	7	6	5	4	3	2	1	0

Note:

1. RAS_n, CAS_n, and WE_n must be LOW during MODE REGISTER SET command.

Table 9: MR0 Register Definition

Mode Register 0	Description
21	**RFU** 0 = Must be programmed to 0 1 = Reserved
20:18	**MR select** 000 = MR0 001 = MR1 010 = MR2 011 = MR3 100 = MR4 101 = MR5 110 = MR6 111 = DNU
17	**N/A on 4Gb and 8Gb, RFU** 0 = Must be programmed to 0 1 = Reserved
13,11:9	**WR (WRITE recovery)/RTP (READ-to-PRECHARGE)** 0000 = 10 / 5 clocks1 0001 = 12 / 6 clocks 0010 = 14 / 7 clocks1 0011 = 16 / 8 / clocks 0100 = 18 / 9 clocks1 0101 = 20 /10 clocks 0110 = 24 / 12 clocks 0111 = 22 / 11 clocks1 1000 = 26 / 13 clocks1 1001 through 1111 = Reserved
8	**DLL reset** 0 = No 1 = Yes
7	**Test mode (TM) – Manufacturer use only** 0 = Normal operating mode, must be programmed to 0

An Important Notice at the end of this datasheet addresses availability, warranty, changes, use in critical applications, intellectual property matters and other important disclaimers.

Mode Register 0	Description
12, 6:4, 2	**CAS latency (CL) – Delay in clock cycles from the internal READ command to first data-out** 00000 = 9 clocks(1) 00001 = 10 clocks 00010 = 11 clocks(1) 00011 = 12 clocks 00100 = 13 clocks(1) 00101 = 14 clocks 00110 = 15 clocks(1) 00111 = 16 clocks 01000 = 18 clocks 01001 = 20 clocks 01010 = 22 clocks 01011 = 24 clocks 01100 = 23 clocks(1) 01101 = 17 clocks(1) 01110 = 19 clocks(1) 01111 = 21 clocks(1) 10000 = 25 clocks (3DS use only) 10001 = 26 clocks 10010 = 27 clocks (3DS use only) 10011 = 28 clocks 10100 = 29 clocks(1) 10101 = 30 clocks 10110 = 31 clocks(1) 10111 = 32 clocks
3	Burst type (BT) – Data burst ordering within a READ or WRITE burst access 0 = Nibble sequential 1 = Interleave
1:0	**Burst length (BL) – Data burst size associated with each read or write access** 00 = BL8 (fixed) 01 = BC4 or BL8 (on-the-fly) 10 = BC4 (fixed) 11 = Reserved

Note:

1. Not allowed when 1/4 rate gear-down mode is enabled.

An Important Notice at the end of this datasheet addresses availability, warranty, changes, use in critical applications, intellectual property matters and other important disclaimers.

7.2.1 Burst Length, Type, and Order

Accesses within a given burst may be programmed to sequential or interleaved order. The ordering of accesses within a burst is determined by the burst length, burst type, and the starting column address as shown in the following table. Burst length options include fixed BC4, fixed BL8, and on-the-fly (OTF), which allows BC4 or BL8 to be selected coincidentally with the registration of a READ or WRITE command via A12/BC_n.

Table 10: Burst Type and Burst Order

Burst Length	READ/ WRITE	Starting Column Address (A[2, 1, 0])	Burst Type = Sequential (Decimal)	Burst Type = Interleaved (Decimal)	Notes
BC4	READ	0 0 0	0, 1, 2, 3, T, T, T, T	0, 1, 2, 3, T, T, T, T	2, 3
		0 0 1	1, 2, 3, 0, T, T, T, T	1, 0, 3, 2, T, T, T, T	2, 3
		0 1 0	2, 3, 0, 1, T, T, T, T	2, 3, 0, 1, T, T, T, T	2, 3
		0 1 1	3, 0, 1, 2, T, T, T, T	3, 2, 1, 0, T, T, T, T	2, 3
		1 0 0	4, 5, 6, 7, T, T, T, T	4, 5, 6, 7, T, T, T, T	2, 3
		1 0 1	5, 6, 7, 4, T, T, T, T	5, 4, 7, 6, T, T, T, T	2, 3
		1 1 0	6, 7, 4, 5, T, T, T, T	6, 7, 4, 5, T, T, T, T	2, 3
		1 1 1	7, 4, 5, 6, T, T, T, T	7, 6, 5, 4, T, T, T, T	2, 3
	WRITE	0, V, V	0, 1, 2, 3, X, X, X, X	0, 1, 2, 3, X, X, X, X	2, 3
		1, V, V	4, 5, 6, 7, X, X, X, X	4, 5, 6, 7, X, X, X, X	2, 3
BL8	READ	0 0 0	0, 1, 2, 3, 4, 5, 6, 7	0, 1, 2, 3, 4, 5, 6, 7	
		0 0 1	1, 2, 3, 0, 5, 6, 7, 4	1, 0, 3, 2, 5, 4, 7, 6	
		0 1 0	2, 3, 0, 1, 6, 7, 4, 5	2, 3, 0, 1, 6, 7, 4, 5	
		0 1 1	3, 0, 1, 2, 7, 4, 5, 6	3, 2, 1, 0, 7, 6, 5, 4	
		1 0 0	4, 5, 6, 7, 0, 1, 2, 3	4, 5, 6, 7, 0, 1, 2, 3	
		1 0 1	5, 6, 7, 4, 1, 2, 3, 0	5, 4, 7, 6, 1, 0, 3, 2	
		1 1 0	6, 7, 4, 5, 2, 3, 0, 1	6, 7, 4, 5, 2, 3, 0, 1	
		1 1 1	7, 4, 5, 6, 3, 0, 1, 2	7, 6, 5, 4, 3, 2, 1, 0	
	WRITE	V, V, V	0, 1, 2, 3, 4, 5, 6, 7	0, 1, 2, 3, 4, 5, 6, 7	3

Notes:

1. Applies to the entire table: 0...7 bit number is the value of CA[2:0] that causes this bit to be the first read during a burst.
2. When setting burst length to BC4 (fixed) in MR0, the internal WRITE operation starts two clock cycles earlier than for the BL8 mode, meaning the starting point for tWR and tWTR will be pulled in by two clocks. When setting burst length to OTF in MR0, the internal WRITE operation starts at the same time as a BL8 (even if BC4 was selected during column time using A12/BC4_n) meaning that if the OTF MR0 setting is used, the starting point for tWR and tWTR will not be pulled in by two clocks as described in the BC4 (fixed) case.
3. T = Output driver for data and strobes are in High-Z.
   V = Valid logic level (0 or 1), but respective buffer input ignores level on input pins.
   X = "Don't Care."

7.2.2 CAS Latency

The CAS latency (CL) setting is defined in the MR0 Register Definition table. CAS latency is the delay, in clock cycles, between the internal READ command and the availability of the first bit of output data. The device does not support half-clock latencies. The overall read latency (RL) is defined as additive latency (AL) + CAS latency (CL): RL = AL + CL.

An Important Notice at the end of this datasheet addresses availability, warranty, changes, use in critical applications, intellectual property matters and other important disclaimers.

7.2.3 Test Mode

The normal operating mode is selected by MR0[7] and all other bits set to the desired values shown in the MR0 Register Definition table. Programming MR0[7] to a value of 1places the device into a DRAM manufacturer-defined test mode to be used only by the manufacturer, not by the end user. No perations or functionality is specified if MR0[7] = 1.

7.2.4 Write Recovery(WR)/READ-to-PRECHARGE

The programmed write recovery (WR) value is used for the auto precharge feature along with tRP to determine tDAL. WR for auto precharge (MIN) in clock cycles is calculated by dividing tWR (in ns) by tCK (in ns) and rounding up to the next integer: WR (MIN) cycles = roundup (tWR [ns]/tCK[ns]). The WR value must be programmed to be equal to or larger than tWR (MIN). When both DM and write CRC are enabled in the mode register, the device calculates CRC before sending the write data into the array; tWR values will change when enabled. If there is a CRC error, the device blocks the WRITE operation and discards the data. Internal READ-to-PRECHARGE (RTP) command delay for auto precharge (MIN) in clock cycles is calculated by dividing tRTP (in ns) by tCK (in ns) and rounding up to the next integer: RTP (MIN) cycles = roundup (tRTP[ns]/tCK[ns]). The RTP value in the mode register must be programmed to be equal to or larger than RTP (MIN). The programmed RTP value is used with tRP to determine the ACT timing to the same bank.

7.2.5 DLL RESET

The DLL reset bit is self-clearing, meaning that it returns to the value of 0 after the DLL RESET function has been issued. After the DLL is enabled, a subsequent DLL RESET should be applied. Any time the DLL RESET function is used, tDLLK must be met before functions requiring the DLL can be used, such as READ commands or synchronous ODT operations, for example).

7.3 MODE REGISTER 1

Mode register 1 (MR1) controls various device operating modes as shown in the following register definition table. Not all settings listed may be available on a die; only settings required for speed bin support are available. MR1 is written by issuing the MRS command while controlling the states of the BGx, BAx, and Ax address pins. The mapping of address pins during the MRS command is shown in the following MR1 Register Definition table.

Table 11: Address Pin Mapping

Address Pin Mapping																					
Address bus	BG1	BG0	BA1	BA0	A17	RAS_n	CAS_n	WE_n	A13	A12	A11	A10	A9	A8	A7	A6	A5	A4	A3	A2	A1	A0
Mode register	21	20	19	18	17	–	–	–	13	12	11	10	9	8	7	6	5	4	3	2	1	0

Note:

1. RAS_n, CAS_n, and WE_n must be LOW during MODE REGISTER SET command.

Table 12: MR1 Register Definition

Mode Register 1	Description
21	**RFU** 0 = Must be programmed to 0 1 = Reserved
20:18	**MR select** 000 = MR0 001 = MR1

An Important Notice at the end of this datasheet addresses availability, warranty, changes, use in critical applications, intellectual property matters and other important disclaimers.

Mode Register 1	Description
	010 = MR2 011 = MR3 100 = MR4 101 = MR5 110 = MR6 111 = DNU
17	**N/A on 4Gb and 8Gb, RFU** 0 = Must be programmed to 0 1 = Reserved
12	**Data output disable (Qoff) – Output buffer disable** 0 = Enabled (normal operation) 1 = Disabled (both ODI and RTT)
11	Not used
10:8	**Nominal ODT (RTT(NOM) – Data bus termination setting (Zq=240 Ω)** 000 = RTT(NOM) disabled 001 = RZQ/4 (60 Ω) 010 = RZQ/2 (120 Ω) 011 = RZQ/6 (40 Ω) 100 = RZQ/1 (240 Ω) 101 = RZQ/5 (48 Ω) 110 = RZQ/3 (80 Ω) 111 = RZQ/7 (34 Ω)
7	**Write leveling (WL) – Write leveling mode** 0 = Disabled (normal operation) 1 = Enabled (enter WL mode)
13, 6, 5	RFU 000 = Default, must be programmed to 0 001 = Reserved 010 = Reserved 011 = Reserved 100 = Reserved 101 = Reserved 110 = Reserved 111 = Reserved
4, 3	**Additive latency (AL) – Command additive latency setting** 00 = 0 (AL disabled) 01 = CL - 11 10 = CL - 2 11 = Reserved
2, 1	**Output driver impedance (ODI) – Output driver impedance setting (Zq=240 Ω)** 00 = RZQ/7 (34 Ω) 01 = RZQ/5 (48 Ω) 10 = Reserved (Although not JEDEC-defined and not tested, this setting will provide RZQ/6 or 40 Ω) 11 = Reserved
0	**DLL enable – DLL enable feature** 0 = DLL disabled 1 = DLL enabled (normal operation)

7.3.1 DLL Enable/DLL Disable

The DLL must be enabled for normal operation and is required during power-up initialization and upon returning to normal operation after having the DLL disabled. During normal operation (DLL enabled with MR1[0]) the DLL is automatically disabled when entering the SELF REFRESH operation and is automatically re-enabled upon exit of the SELF REFRESH operation. Any time the DLL is enabled and subsequently reset, tDLLK clock cycles must occur before a READ or SYNCHRONOUS ODT command can

An Important Notice at the end of this datasheet addresses availability, warranty, changes, use in critical applications, intellectual property matters and other important disclaimers.

be issued to allow time for the internal clock to be synchronized with the external clock. Failing to wait for synchronization to occur may result in a violation of the tAON, or tAOF parameters. During tDLLK, CKE must continuously be registered HIGH. The device does not require DLL for any WRITE operation, except when RTT(WR) is enabled and the DLL is required for proper ODT operation.

The direct ODT feature is not supported during DLL off mode. The ODT resistors must be disabled by continuously registering the ODT pin LOW and/or by programming the RTT(NOM) bits MR1[9,6,2] = 000 via an MRS command during DLL off mode. The dynamic ODT feature is not supported in DLL off mode; to disable dynamic ODT externally, use the MRS command to set RTT(WR), MR2[10:9] = 00.

7.3.2 Output Driver Impedance Control

The output driver impedance of the device is selected by MR1[2,1], as shown in the MR1 Register Definition table.

7.3.3 ODT RTT(NOM) Values

The device can provide three different termination values: RTT(Park), RTT(NOM), and RTT(WR). The nominal termination value, RTT(NOM), is programmed in MR1. A separate value, RTT(WR), may be programmed in MR2 to enable a unique RTT value when ODT is enabled during WRITE operations. The RTT(WR) value can be applied during WRITE commands even when RTT(NOM) is disabled. A third RTT value, RTT(Park), is programmed in MR5. RTT(Park) provides a termination value when the ODT signal is LOW.

7.3.4 Additive Latency

The ADDITIVE LATENCY (AL) operation is supported to make command and data buses efficient for sustainable bandwidths in the device. In this operation, the device allows a READ or WRITE command (either with or without auto precharge) to be issued immediately after the ACTIVATE command. The command is held for the time of AL before it is issued inside the device. READ latency (RL) is controlled by the sum of the AL and CAS latency (CL) register settings. WRITE latency (WL) is controlled by the sum of the AL and CAS WRITE latency (CWL) register settings.

Table 13: Additive Latency (AL) Settings

A4	A3	AL
0	0	0 (AL disabled)
0	1	CL - 1
1	0	CL - 2
1	1	Reserved

Note:

1. AL has a value of CL - 1 or CL - 2 based on the CL values programmed in the MR0 register.

7.3.5 Write Leveling

For better signal integrity, the device uses fly-by topology for the commands, addresses, control signals, and clocks. Fly-by topology benefits from a reduced number of stubs and their lengths, but it causes flight-time skew between clock and strobe at every DRAM on the DIMM. This makes it difficult for the controller to maintain tDSS, and tDSH specifications. Therefore, the device supports a write leveling feature that allows the controller to compensate for skew.

7.3.6 Output Disable

The device outputs may be enabled/disabled by MR1[12] as shown in the MR1 Register Definition table. When MR1[12] is enabled (MR1[12] = 1) all output pins (such as DQ and DQS) are disconnected from the

An Important Notice at the end of this datasheet addresses availability, warranty, changes, use in critical applications, intellectual property matters and other important disclaimers.

device, which removes any loading of the output drivers. For example, this feature may be useful when measuring MCP power. For normal operation, set MR1[12] to 0.

7.4 MODE REGISTER 2

Mode register 2 (MR2) controls various device operating modes as shown in the following register definition table. Not all settings listed may be available on a die; only settings required for speed bin support are available. MR2 is written by issuing the MRS command while controlling the states of the BGx, BAx, and Ax address pins. The mapping of address pins during the MRS command is shown in the following MR2 Register Definition table.

Table 14: Address Pin Mapping

Address Pin Mapping																					
Address bus	BG1	BG0	BA1	BA0	A17	RAS_n	CAS_n	WE_n	A13	A12	A11	A10	A9	A8	A7	A6	A5	A4	A3	A2	A1	A0
Mode register	21	20	19	18	17	–	–	–	13	12	11	10	9	8	7	6	5	4	3	2	1	0

Note:

1. RAS_n, CAS_n, and WE_n must be LOW during MODE REGISTER SET command.

Table 15: MR2 Register Definition

Mode Register 2	Description
21	**RFU** 0 = Must be programmed to 0 1 = Reserved
20:18	**MR select** 000 = MR0 001 = MR1 010 = MR2 011 = MR3 100 = MR4 101 = MR5 110 = MR6 111 = DNU
17	**N/A on 4Gb and 8Gb, RFU** 0 = Must be programmed to 0 1 = Reserved
13	**TRR mode** 0 = Disabled 1 = Enabled
12	**WRITE data bus CRC** 0 = Disabled 1 = Enabled
11:9	**Dynamic ODT (RTT(WR)) – Data bus termination setting during WRITE (Zq=240 Ω)** 000 = RTT(WR) disabled (WRITE does not affect RTT value) 001 = RZQ/2 (120 Ω) 010 = RZQ/1 (240 Ω) 011 = High-Z 100 = RZQ/3 (80 Ω) 101 = Reserved 110 = Reserved 111 = Reserved

An Important Notice at the end of this datasheet addresses availability, warranty, changes, use in critical applications, intellectual property matters and other important disclaimers.

Mode Register 2	Description
7:6	**Low-power auto self refresh (LPASR) – Mode summary** 00 = Manual mode - Normal operating temperature range (TC: 0°C–85°C) 01 = Manual mode - Reduced operating temperature range (TC: 0°C–45°C) 10 = Manual mode - Extended operating temperature range (TC: 0°C–95°C) 11 = ASR mode - Automatically switching among all modes
5:3	**CAS WRITE latency (CWL) – Delay in clock cycles from the internal WRITE command to first data-in 1tCK WRITE preamble** 000 = 9 (DDR4-1600)(1) (2) 001 = 10 (DDR4-1866) (2) 010 = 11 (DDR4-2133/1600)(1) (2) 011 = 12 (DDR4-2400/1866) (2) 100 = 14 (DDR4-2666/2133) (2) 101 = 16 (DDR4-2933/3200/2400) (2) 110 = 18 (DDR4-2666) (2) 111 = 20 (DDR4-2933/3200) (2)
	CAS WRITE latency (CWL) – Delay in clock cycles from the internal WRITE command to first data-in 2tCK WRITE preamble 000 = N/A 001 = N/A 010 = N/A 011 = N/A 100 = 14 (DDR4-2400) 101 = 16 (DDR4-2666/2400) (2) 110 = 18 (DDR4-2933/3200/2666) (2) 111 = 20 (DDR4-2933/3200) (2)
8, 2	**TRR mode - BGn control** 00 = BG0 01 = BG1 10 = BG2 11 = BG3
1:0	**TRR mode - BAn control** 00 = BA0 01 = BA1 10 = BA2 11 = BA3

Notes:

1. Not allowed when 1/4 rate gear-down mode is enabled.
2. This datasheet only address speed up to 2400MT/s.

7.4.1 CAS WRITE Latency

CAS WRITE latency (CWL) is defined by MR2[5:3] as shown in the MR2 Register Definition table. CWL is the delay, in clock cycles, between the internal WRITE command and the availability of the first bit of input data. The device does not support any half-clock latencies. The overall WRITE latency (WL) is defined as additive latency (AL) + parity latency (PL) + CAS WRITE latency (CWL): WL = AL +PL + CWL.

7.4.2 Low-Power Auto Self Refresh

Low-power auto self refresh (LPASR) is supported in the device. Applications requiring SELF REFRESH operation over different temperature ranges can use this feature to optimize the IDD6 current for a given temperature range as specified in the MR2 Register Definition table.

An Important Notice at the end of this datasheet addresses availability, warranty, changes, use in critical applications, intellectual property matters and other important disclaimers.

7.4.3 Dynamic ODT

In certain applications and to further enhance signal integrity on the data bus, it is desirable to change the termination strength of the device without issuing an MRS command. This may be done by configuring the dynamic ODT (RTT(WR)) settings in MR2[11:9]. In write leveling mode, only RTT(NOM) is available.

7.4.4 Write Cyclic Redundancy Check Data Bus

The write cyclic redundancy check (CRC) data bus feature during writes has been added to the device. When enabled via the mode register, the data transfer size goes from the normal 8-bit (BL8) frame to a larger 10-bit UI frame, and the extra two UIs are used for the CRC information.

7.4.5 Target Row Refresh Mode

For the device, rows can be accessed a limited number of times within a certain time period before adjacent rows require refresh. The maximum activate count (MAC) is the maximum number of activates that a single row can sustain within a time interval of equal to or less than the maximum activate window (tMAW) before the adjacent rows need to be refreshed regardless of how the activates are distributed over tMAW. The row receiving the excessive activates is the target row (TR*n*); the two adjacent rows to be refreshed are the victim rows. When the MAC limit is reached on TR*n*, either the device must receive (roundup of tMAW / tREFI) REFRESH commands (REF) before another row activate is issued, or it needs to be placed into targeted row refresh (TRR) mode. The TRR mode will refresh the rows adjacent to the TR*n* that encountered the MAC limit. There could be one or two target rows in a bank associated to one victim row. The cumulative value of the activates from two target rows on a victim row should not exceed the MAC value as well. When the temperature controlled refresh (TCR) mode is enabled, tMAW should be adjusted depending on the TCR range as shown in the following table. Using TRR mode is not required, and in some cases has been rendered inoperable, as the device automatically performs TRR Mode in the background.

7.5 MODE REGISTER 3

Mode register 3 (MR3) controls various device operating modes as shown in the following register definition table. Not all settings listed may be available on a die; only settings required for speed bin support are available. MR3 is written by issuing the MRS command while controlling the states of the BG*x*, BA*x*, and A*x* address pins. The mapping of address pins during the MRS command is shown in the following MR3 Register Definition table.

An Important Notice at the end of this datasheet addresses availability, warranty, changes, use in critical applications, intellectual property matters and other important disclaimers.

Table 16: Address Pin Mapping

Address Pin Mapping																					
Address bus	BG1	BG0	BA1	BA0	A17	RAS_n	CAS_n	WE_n	A13	A12	A11	A10	A9	A8	A7	A6	A5	A4	A3	A2	A1	A0
Mode register	21	20	19	18	17	–	–	–	13	12	11	10	9	8	7	6	5	4	3	2	1	0

Note:

1. RAS_n, CAS_n, and WE_n must be LOW during MODE REGISTER SET command.

Table 17: MR3 Register Definition

Mode Register 3	Description
21	**RFU** 0 = Must be programmed to 0 1 = Reserved
20:18	**MR select** 000 = MR0 100 = MR4 001 = MR1 101 = MR5 010 = MR2 110 = MR6 011 = MR3 111 = DNU
17	**N/A on 4Gb and 8Gb, RFU** 0 = Must be programmed to 0 1 = Reserved
13	**RFU** 0 = Must be programmed to 0 1 = Reserved
12:11	**Multipurpose register (MPR) – Read format** 00 = Serial 10 = Staggered 01 = Parallel11 = Reserved
10:9	**WRITE CMD latency when CRC/DM enabled** 00 = 4CK (DDR4-1600) (1) 10 = 6CK (DDR4-2666/2933/3200) (1) 01 = 5CK (DDR4-1866/2133/2400) (1) 11 = Reserved
8:6	**Fine granularity refresh mode 000 = Normal mode (fixed 1x)** 001 = Fixed 2x 101 = On-the-fly 1x/2x 010 = Fixed 4x 110 = On-the-fly 1x/4x 011 = Reserved 111 = Reserved 100 = Reserved
5	**Temperature sensor status** 0 = Disabled 1 = Enabled
4	**Per-DRAM addressability** 0 = Normal operation (disabled) 1 = Enable
3	Gear-down mode – Ratio of internal clock to external data rate 0 = [1:1]; (1/2 rate data) 1 = [2:1]; (1/4 rate data)
2	**Multipurpose register (MPR) access** 0 = Normal operation 1 = Data flow from MPR
1:0	**MPR page select** 00 = Page 0 10 = Page 2 01 = Page 1 11 = Page 3 (restricted for DRAM manufacturer use only)

Note:

1. This Datasheet only address speed up to 2400MT/s.

An Important Notice at the end of this datasheet addresses availability, warranty, changes, use in critical applications, intellectual property matters and other important disclaimers.

7.5.1 Multipurpose Register

The multipurpose register (MPR) is used for several features:

- Readout of the contents of the MRn registers,
- WRITE and READ system patterns used for data bus calibration,
- Readout of the error frame when the command address parity feature is enabled.

To enable MPR, issue an MRS command to MR3[2] = 1. MR3[12:11] define the format of read data from the MPR. Prior to issuing the MRS command, all banks must be in the idle state (all banks precharged and tRP met). After MPR is enabled, any subsequent RD or RDA commands will be redirected to a specific mode register. The mode register location is specified with the READ command using address bits. The MR is split into upper and lower halves to align with a burst length limitation of 8. Power-down mode, SELF REFRESH, and any other nonRD/RDA or nonWR/WRA commands are not allowed during MPR mode. The RESET function is supported during MPR mode, which requires device re-initialization.

7.5.2 WRITE Command Latency When CRC/DM is Enabled

The WRITE command latency (WCL) must be set when both write CRC and DM are enabled for write CRC persistent mode. This provides the extra time required when completing a WRITE burst when write CRC and DM are enabled.

7.5.3 Fine Granularity Refresh Mode

This mode had been added to DDR4 to help combat the performance penalty due to refresh lockout at high densities. Shortening tRFC and increasing cycle time allows more accesses to the chip and can produce higher bandwidth.

7.5.4 Temperature Sensor Status

This mode directs the DRAM to update the temperature sensor status at MPR Page 2, MPR0 [4,3]. The temperature sensor setting should be updated within 32ms; when an MPR read of the temperature sensor status bits occurs, the temperature sensor status should be no older than 32ms.

7.5.5 Per-DRAM Addressability

This mode allows commands to be masked on a per device basis providing any device in a rank (devices sharing the same command and address signals) to be programmed individually. As an example, this feature can be used to program different ODT or VREF values on DRAM devices within a given rank.

7.5.6 Gear-Down Mode

The device defaults in 1/2 rate (1N) clock mode and uses a low frequency MRS command followed by a sync pulse to align the proper clock edge for operating the control lines CS_n, CKE, and ODT when in 1/4 rate (2N) mode. For operation in 1/2 rate mode, no MRS command or sync pulse is required.

An Important Notice at the end of this datasheet addresses availability, warranty, changes, use in critical applications, intellectual property matters and other important disclaimers.

7.6 MODE REGISTER 4

Mode register 4 (MR4) controls various device operating modes as shown in the following register definition table. Not all settings listed may be available on a die; only settings required for speed bin support are available. MR4 is written by issuing the MRS command while controlling the states of the BG*x*, BA*x*, and A*x* address pins. The mapping of address pins during the MRS command is shown in the following MR4 Register Definition table.

Table 18: Address Pin Mapping

Address Pin Mapping																					
Address bus	BG1	BG0	BA1	BA0	A17	RAS_n	CAS_n	WE_n	A13	A12	A11	A10	A9	A8	A7	A6	A5	A4	A3	A2	A1	A0
Mode register	21	20	19	18	17	–	–	–	13	12	11	10	9	8	7	6	5	4	3	2	1	0

Note:

1. RAS_n, CAS_n, and WE_n must be LOW during MODE REGISTER SET command.

Table 19: MR4 Register Definition

Mode Register 4	Description
21	**RFU** 0 = Must be programmed to 0 1 = Reserved
20:18	**MR select** 000 = MR0 001 = MR1 010 = MR2 011 = MR3 100 = MR4 101 = MR5 110 = MR6 111 = DNU
17	**N/A on 4Gb and 8Gb, RFU** 0 = Must be programmed to 0 1 = Reserved
13	Post Package Repair (PPR mode) 0 = Disabled 1 = Enabled
12	**WRITE preamble setting** 0 = 1tCK toggle1 1 = 2tCK toggle
11	**READ preamble setting** 0 = 1tCK toggle1 1 = 2tCK toggle (When operating in 2tCK WRITE preamble mode, CWL must be programmed to a value at least 1 clock greater than the lowest CWL setting supported in the applicable tCK range.)
10	**READ preamble training** 0 = Disabled 1 = Enabled
9	**Self refresh abort mode** 0 = Disabled 1 = Enabled
8:6	**CMD (CAL) address latency** 000 = 0 clocks (disabled)

An Important Notice at the end of this datasheet addresses availability, warranty, changes, use in critical applications, intellectual property matters and other important disclaimers.

Mode Register 4	Description
	001 =3 clocks1 010 = 4 clocks 011 = 5 clocks1 100 = 6 clocks 101 = 8 clocks 110 = Reserved 111 = Reserved
5	Soft Post Package Repair (sPPR mode) 0 = Disabled 1 = Enabled
4	**Internal VREF monitor** 0 = Disabled 1 = Enabled
3	Temperature controlled refresh mode 0 = Disabled 1 = Enabled
2	**Temperature controlled refresh range** 0 = Normal temperature mode 1 = Extended temperature mode
1	**Maximum power savings mode** 0 = Normal operation 1 = Enabled
0	**RFU** 0 = Must be programmed to 0 1 = Reserved

Note:

1. Not allowed when 1/4 rate gear-down mode is enabled.

7.6.1 Post Package Repair Mode

The post package repair (PPR) mode feature is JEDEC optional for 4Gb DDR4 memories. Performing an MPR read to page 2 MPR0 [7] indicates whether PPR mode is available (A7 = 1) or not available (A7 = 0). PPR mode provides a simple and easy repair method of the device after placed in the system. One row per bank group can be repaired. The repair process is irrevocable so great care should be exercised when using.

7.6.2 Soft Post Package Repair Mode

The soft post package repair (sPPR) mode feature is JEDEC optional for 4Gb and 8Gb DDR4 memories. Performing an MPR read to page 2 MPR0 [6] indicates whether sPPR mode is available (A6 = 1) or not available (A6 = 0). sPPR mode provides a simple and easy repair method of the device after placed in the system. One row per bank group can be repaired. The repair process is revocable by either doing a reset or power-down.

7.6.3 WRITE Preamble

Programmable WRITE preamble, t_{WPRE}, can be set to 1tCK or 2tCK via the MR4 register. The 1tCK setting is similar to DDR3. However, when operating in 2tCK WRITE preamble mode, CWL must be programmed to a value at least 1 clock greater than the lowest CWL setting supported in the applicable tCK range.

An Important Notice at the end of this datasheet addresses availability, warranty, changes, use in critical applications, intellectual property matters and other important disclaimers.

7.6.4 READ Preamble

Programmable READ preamble tRPRE can be set to 1tCK or 2tCK via the MR4 register. Both the 1tCK and 2tCK DDR4 preamble settings are different from that defined for the DDR3 SDRAM. Both DDR4 READ preamble settings may require the memory controller to train (or read level) its data strobe receivers using the READ preamble training. When operating in 2tCK WRITE preamble mode, CWL must be programmed to a value at least 1 clock greater than the lowest CWL setting supported in the applicable tCK range. Some even settings will require addition of 2 clocks. If the alternate longer CWL was used, the additional clocks will not be required.

7.6.5 READ Preamble Training

Programmable READ preamble training can be set to 1tCK or 2tCK. This mode can be used by the memory controller to train or READ level its data strobe receivers.

7.6.6 Temperature-Controlled Refresh

When temperature-controlled refresh mode is enabled, the device may adjust the internal refresh period to be longer than tREFI of the normal temperature range by skipping external REFRESH commands with the proper gear ratio. For example, the DRAM temperature sensor detected less than 45°C. Normal temperature mode covers the range of 0°C to 85°C, while the extended temperature range covers 0°C to 95°C.

7.6.7 Command Address Latency

COMMAND ADDRESS LATENCY (CAL) is a power savings feature and can be enabled or disabled via the MRS setting. CAL is defined as the delay in clock cycles (tCAL) between a CS_n registered LOW and its corresponding registered command and address. The value of CAL (in clocks) must be programmed into the mode register and is based on the roundup (in clocks) of [tCK(ns)/tCAL(ns)].

7.6.8 Internal VREF Monitor

The device generates its own internal VREFDQ. This mode may be enabled during VREFDQ training, and when enabled, VREF,time-short and VREF,time-long need to be increased by 10ns if DQ0, DQ1, DQ2, or DQ3 have 0pF loading. An additional 15ns per pF of loading is also needed.

7.6.9 Maximum Power Savings Mode

This mode provides the lowest power mode where data retention is not required. When the device is in the maximum power saving mode, it does not need to guarantee data retention or respond to any external command (except the MAXIMUM POWER SAVING MODE EXIT command and during the assertion of RESET_n signal LOW).

An Important Notice at the end of this datasheet addresses availability, warranty, changes, use in critical applications, intellectual property matters and other important disclaimers.

7.7 MODE REGISTER 5

Mode register 5 (MR5) controls various device operating modes as shown in the following register definition table. Not all settings listed may be available on a die; only settings required for speed bin support are available. MR5 is written by issuing the MRS command while controlling the states of the BG*x*, BA*x*, and A*x* address pins. The mapping of address pins during the MRS command is shown in the following MR5 Register Definition table.

Table 20: Address Pin Mapping

Address Pin Mapping																					
Address bus	BG1	BG0	BA1	BA0	A17	RAS_n	CAS_n	WE_n	A13	A12	A11	A10	A9	A8	A7	A6	A5	A4	A3	A2	A1	A0
Mode register	21	20	19	18	17	–	–	–	13	12	11	10	9	8	7	6	5	4	3	2	1	0

Note:

1. RAS_n, CAS_n, and WE_n must be LOW during MODE REGISTER SET command.

Table 21: MR5 Register Definition

Mode Register 5	Description
21	**RFU** 0 = Must be programmed to 0 1 = Reserved
20:18	**MR select** 000 = MR0 001 = MR1 010 = MR2 011 = MR3 100 = MR4 101 = MR5 110 = MR6 111 = DNU
17	**N/A on 4Gb and 8Gb, RFU** 0 = Must be programmed to 0 1 = Reserved
13	**RFU** 0 = Must be programmed to 0 1 = Reserved
12	Data bus inversion (DBI) – READ DBI enable 0 = Disabled 1 = Enabled
11	Data bus inversion (DBI) – WRITE DBI enable 0 = Disabled 1 = Enabled
10	**Data mask (DM)** 0 = Disabled 1 = Enabled
9	CA parity persistent error mode 0 = Disabled 1 = Enabled
8:6	**Parked ODT value (RTT(Park)) (Zq=240 Ω)** 000 = RTT(Park) disabled 001 = RZQ/4 (60 Ω)

An Important Notice at the end of this datasheet addresses availability, warranty, changes, use in critical applications, intellectual property matters and other important disclaimers.

Mode Register 5	Description
	010 = RZQ/2 (120 Ω) 011 = RZQ/6 (40 Ω) 100 = RZQ/1 (240 Ω) 101 = RZQ/5 (48 Ω) 110 = RZQ/3 (80 Ω) 111 = RZQ/7 (34 Ω)
5	**ODT input buffer for power-down** 0 = Buffer enabled 1 = Buffer disabled
4	CA parity error status 0 = Clear 1 = Error
3	**CRC error status** 0 = Clear 1 = Error
2:0	**CA parity latency mode** 000 = Disable 001 = 4 clocks (DDR4-1600/1866/2133) (2) 010 = 5 clocks (DDR4-2400)(1) (2) 011 = 6 clocks (DDR4-2666) (2) 100 = 8 clocks (DDR4-2933/3200) (2) 101 = Reserved 110 = Reserved 111 = Reserved

Notes:

1. Not allowed when 1/4 rate gear-down mode is enabled.
2. This datasheet only address speed up to 2400MT/s.

7.7.1 Data Bus Inversion

The DATA BUS INVERSION (DBI) function has been added to the device. The DBI function shares a common pin with the DM. The DBI function applies to both READ and WRITE operations; Write DBI cannot be enabled at the same time the DM function is enabled. DBI is not allowed during MPR READ operation; during an MPR read, the DRAM ignores the read DBI enable setting in MR5 bit A12.

7.7.2 Data Mask

The DATA MASK (DM) function, also described as a partial write, has been added to the device. The DM function shares a common pin with the DBI function. The DM function applies only to WRITE operations and cannot be enabled at the same time the write DBI function is enabled.

7.7.3 CA Parity Persistent Error Mode

Normal CA parity mode (CA parity persistent mode disabled) no longer performs CA parity checking while the parity error status bit remains set at 1. However, with CA parity persistent mode enabled, CA parity checking continues to be performed when the parity error status bit is set to a 1.

An Important Notice at the end of this datasheet addresses availability, warranty, changes, use in critical applications, intellectual property matters and other important disclaimers.

7.7.4 ODT Input Buffer for Power-Down

This feature determines whether the ODT input buffer is on or off during power-down. If the input buffer is configured to be on (enabled during power-down), the ODT input signal must be at a valid logic level. If the input buffer is configured to be off (disabled during power-down), the ODT input signal may be floating and the device does not provide RTT(NOM) termination. However, the device may provide RTT(Park) termination depending on the MR settings. This is primarily for additional power savings.

7.7.5 CA Parity Error Status

The device will set the error status bit to 1 upon detecting a parity error. The parity error status bit remains set at 1 until the device controller clears it explicitly using an MRS command.

7.7.6 CRC Error Status

The device will set the error status bit to 1 upon detecting a CRC error. The CRC error status bit remains set at 1 until the device controller clears it explicitly using an MRS command.

7.7.7 CA Parity Latency Mode

CA parity is enabled when a latency value, dependent on tCK, is programmed; this accounts for parity calculation delay internal to the device. The normal state of CA parity is to be disabled. If CA parity is enabled, the device must ensure there are no parity errors before executing the command. CA parity signal (PAR) covers ACT_n, RAS_n/A16 , CAS_n/A15, WE_n/A14, and the address bus including bank address and bank group bits. The control signals CKE, ODT, and CS_n are not included in the parity calculation.

An Important Notice at the end of this datasheet addresses availability, warranty, changes, use in critical applications, intellectual property matters and other important disclaimers.

7.8 MODE REGISTER 6

Mode register 6 (MR6) controls various device operating modes as shown in the following register definition table. Not all settings listed may be available on a die; only settings required for speed bin support are available. MR6 is written by issuing the MRS command while controlling the states of the BG*x*, BA*x*, and A*x* address pins. The mapping of address pins during the MRS command is shown in the following MR6 Register Definition table.

Table 22: Address Pin Mapping

Address Pin Mapping																						
Address bus	BG1	BG0	BA1	BA0	A17	RAS_n	CAS_n	WE_n	A13	A12	A11	A10	A9	A8	A7	A6	A5	A4	A3	A2	A1	A0
Mode register	21	20	19	18	17	–	–	–	13	12	11	10	9	8	7	6	5	4	3	2	1	0

Note:

1. RAS_n, CAS_n, and WE_n must be LOW during MODE REGISTER SET command.

Table 23: MR6 Register Definition

Mode Register 6	Description
21	**RFU** 0 = Must be programmed to 0 1 = Reserved
20:18	**MR select** 000 = MR0 010 = MR2 100 = MR4 110 = MR6 001 = MR1 011 = MR3 101 = MR5 111 = DNU
17	**NA on 4Gb and 8Gb, RFU** 0 = Must be programmed to 0 1 = Reserved
12:10	**tCCD_L** 000 = 4 clocks (≤1333 Mb/s) (1) 100 = 8 clocks (>2666 Mb/s and ≤3200 Mb/s) (1) 001 = 5 clocks (>1333 Mb/s and ≤1866 Mb/s) (1) 101 = Reserved 010 = 6 clocks (>1866 Mb/s and ≤2400 Mb/s) (1) 110 = Reserved 011 = 7 clocks (>2400 Mb/s and ≤2666 Mb/s) (1) 111 = Reserved
13, 9, 8	**RFU** 000 = Default, must be programmed to 000 010 = Reserved 100 = Reserved 110 = Reserved 001 = Reserved 011 = Reserved 101 = Reserved 111 = Reserved
7	**VREF Calibration Enable** 0 = Disable 1 = Enable
6	**VREF Calibration Range** 0 = Range 1 1 = Range 2
5:0	**VREF Calibration Value** See the VREFDQ Range and Levels table in the VREFDQ Calibration section

Note:

1. This datasheet only address speed up to 2400MT/s.

An Important Notice at the end of this datasheet addresses availability, warranty, changes, use in critical applications, intellectual property matters and other important disclaimers.

7.8.1 t_{CCD_L} Programming

The device controller must program the correct t_{CCD_L} value. t_{CCD_L} will be programmed according to the value defined per operating frequency in the AC parameter table. Although JEDEC specifies the larger of 5nCK or Xns, Micron's DRAM supports the larger of 4nCK or Xns.

7.8.2 VREFDQ Calibration Enable

VREFDQ calibration is where the device internally generates its own VREFDQ to be used by the DQ input receivers. The VREFDQ value will be output on any DQ of DQ[3:0] for evaluation only. The device controller is responsible for setting and calibrating the internal VREFDQ level using an MRS protocol (adjust up, adjust down, and so on). It is assumed that the controller will use a series of writes and reads in conduction with VREFDQ adjustments to optimize and verify the data eye. Enabling VREFDQ calibration must be used whenever values are being written to the MR6[6:0] register.

7.8.3 VREFDQ Calibration Range

The device defines two VREFDQ calibration ranges: Range 1 and Range 2. Range 1 supports VREFDQ between 60% and 92% of VDD while Range 2 supports VREFDQ between 45% and 77% of VDD, as seen in VREFDQ Specification table. Although not a restriction, Range 1 was targeted for module-based designs and Range 2 was added to target point-to-point designs.

7.8.4 VREFDQ Calibration Value

Fifty settings provide approximately 0.65% of granularity steps sizes for both Range 1 and Range 2 of VREFDQ, as seen in VREFDQ Range and Levels table in the VREFDQ Calibration section.

8 DQ INTERNAL VREF SPECIFICATIONS

8.1 VREFDQ Calibration and Training

The VREFDQ level, which is used by the DRAM DQ input receivers, is internally generated. The DRAM VREFDQ does not have a default value upon power-up and must be set to the desired value, usually via VREFDQ calibration mode. If PDA or PPR modes are used prior to VREFDQ calibration, VREFDQ should initially be set at the midpoint between the VDD, max, and the LOW as determined by the driver and ODT termination selected with wide voltage swing on the input levels and setup and hold times of approximately 0.75UI. The memory controller is responsible for VREFDQ calibration to determine the best internal VREFDQ level. The VREFDQ calibration is enabled/disabled via MR6[7], MR6[6] selects Range 1 (60% to 92.5% of VDD) or Range 2 (45% to 77.5% of VDD), and an MRS protocol using MR6[5:0] to adjust the VREFDQ level up and down. MR6[6:0] bits can be altered using the MRS command if MR6[7] is disabled. The DRAM controller will likely use a series of writes and reads in conjunction with VREFDQ adjustments to obtain the best VREFDQ, which in turn optimizes the data eye. The internal VREFDQ specification parameters are voltage range, step size, VREF step time, VREF full step time, and VREF valid level. The voltage operating range specifies the minimum required VREF setting range for DDR4 SDRAM devices. The minimum range is defined by VREFDQ,min and VREFDQ,max. As noted, a calibration sequence, determined by the DRAM controller, should be performed to adjust VREFDQ and optimize the timing and voltage margin of the DRAM data input receivers. The internal VREFDQ voltage value may not be exactly within the voltage range setting coupled with the VREF set tolerance; the device must be calibrated to the correct internal VREFDQ voltage.

An Important Notice at the end of this datasheet addresses availability, warranty, changes, use in critical applications, intellectual property matters and other important disclaimers.

8.1.1 VREFDQ Voltage Range

Figure 6: VREFDQ Voltage Range

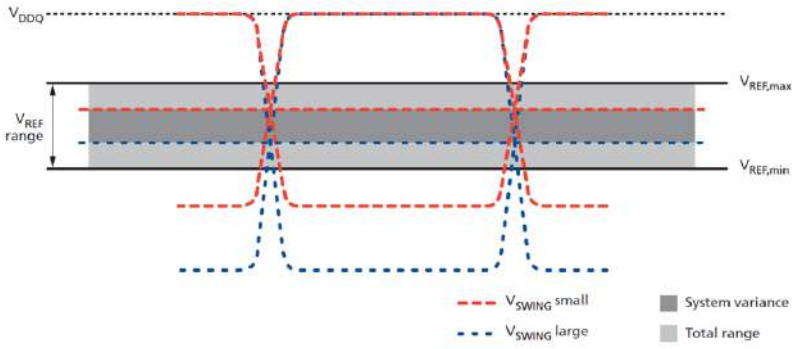

8.1.2 VREFDQ Range and Levels

Table 24: VREFDQ Range and Levels

MR6[5:0]	Range 1 MR6[6] 0	Range 2 MR6[6] 1	MR6[5:0]	Range 1 MR6[6] 0	Range 2 MR6[6] 1
00 0000	60.00%	45.00%	01 1010	76.90%	61.90%
00 0001	60.65%	45.65%	01 1011	77.55%	62.55%
00 0010	61.30%	46.30%	01 1100	78.20%	63.20%
00 0011	61.95%	46.95%	01 1101	78.85%	63.85%
00 0100	62.60%	47.60%	01 1110	79.50%	64.50%
00 0101	63.25%	48.25%	01 1111	80.15%	65.15%
00 0110	63.90%	48.90%	10 0000	80.80%	65.80%
00 0111	64.55%	49.55%	10 0001	81.45%	66.45%
00 1000	65.20%	50.20%	10 0010	82.10%	67.10%
00 1001	65.85%	50.85%	10 0011	82.75%	67.75%
00 1010	66.50%	51.50%	10 0100	83.40%	68.40%
00 1011	67.15%	52.15%	10 0101	84.05%	69.05%
00 1100	67.80%	52.80%	10 0110	84.70%	69.70%
00 1101	68.45%	53.45%	10 0111	85.35%	70.35%
00 1110	69.10%	54.10%	10 1000	86.00%	71.00%
00 1111	69.75%	54.75%	10 1001	86.65%	71.65%
01 0000	70.40%	55.40%	10 1010	87.30%	72.30%
01 0001	71.05%	56.05%	10 1011	87.95%	72.95%
01 0010	71.70%	56.70%	10 1100	88.60%	73.60%
01 0011	72.35%	57.35%	10 1101	89.25%	74.25%
01 0100	73.00%	58.00%	10 1110	89.90%	74.90%
01 0101	73.65%	58.65%	10 1111	90.55%	75.55%
01 0110	74.30%	59.30%	11 0000	91.20%	76.20%
01 0111	74.95%	59.95%	11 0001	91.85%	76.85%
01 1000	75.60%	60.60%	11 0010	92.50%	77.50%
01 1001	76.25%	61.25%	11 011 to 11 1111 = Reserved		

An Important Notice at the end of this datasheet addresses availability, warranty, changes, use in critical applications, intellectual property matters and other important disclaimers.

8.1.3 VREFDQ Step Size

The VREF step size is defined as the step size between adjacent steps. VREF step size ranges from 0.5% VDD to 0.8% VDD. However, for a given design, the device has one value for VREF step size that falls within the range. The VREF set tolerance is the variation in the VREF voltage from the ideal setting. This accounts for accumulated error over multiple steps. There are two ranges for VREF set tolerance uncertainty. The range of VREF set tolerance uncertainty is a function of number of steps n. The VREF set tolerance is measured with respect to the ideal line, which is based on the MIN and MAX VREF value endpoints for a specified range. The internal VREFDQ voltage value may not be exactly within the voltage range setting coupled with the VREF set tolerance; the device must be calibrated to the correct internal VREFDQ voltage.

Figure 7: Example of VREF Set Tolerance and Step Size

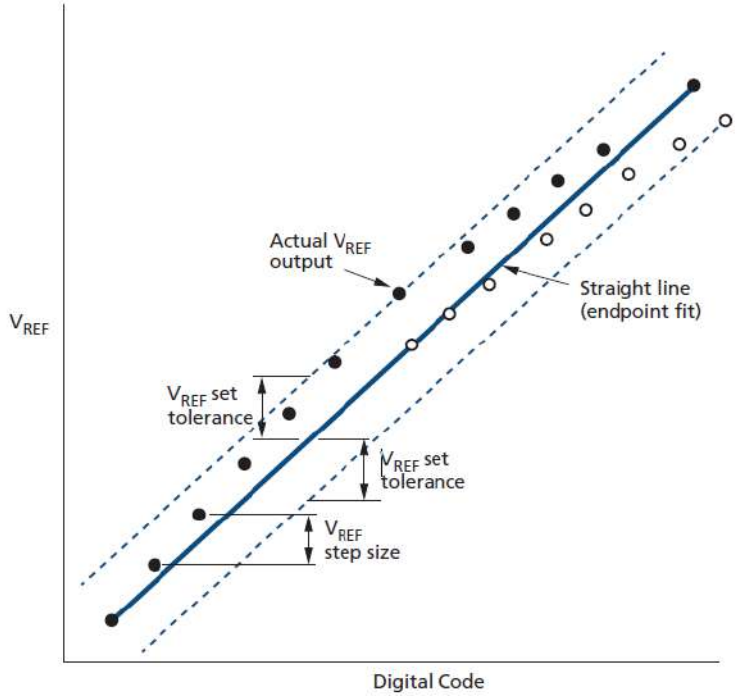

Note:

1. Maximum case shown.

An Important Notice at the end of this datasheet addresses availability, warranty, changes, use in critical applications, intellectual property matters and other important disclaimers.

8.1.4 VREFDQ Increment and Decrement Timing

The VREF increment/decrement step times are defined by VREF,time. VREF,time is defined from t0 to t1, where t1 is referenced to the VREF voltage at the final DC level within the VREF valid tolerance (VREF,val_tol). The VREF valid level is defined by VREF,val tolerance to qualify the step time t1. This parameter is used to insure an adequate RC time constant behavior of the voltage level change after any VREF increment/decrement adjustment.

Notes:

1. t0 is referenced to the MRS command clock
2. t1 is referenced to VREF,tol

8.1.4.1 VREFDQ Timing Diagram for VREF,time Parameter

Figure 8: VREFDQ Timing Diagram for VREF,time Parameter

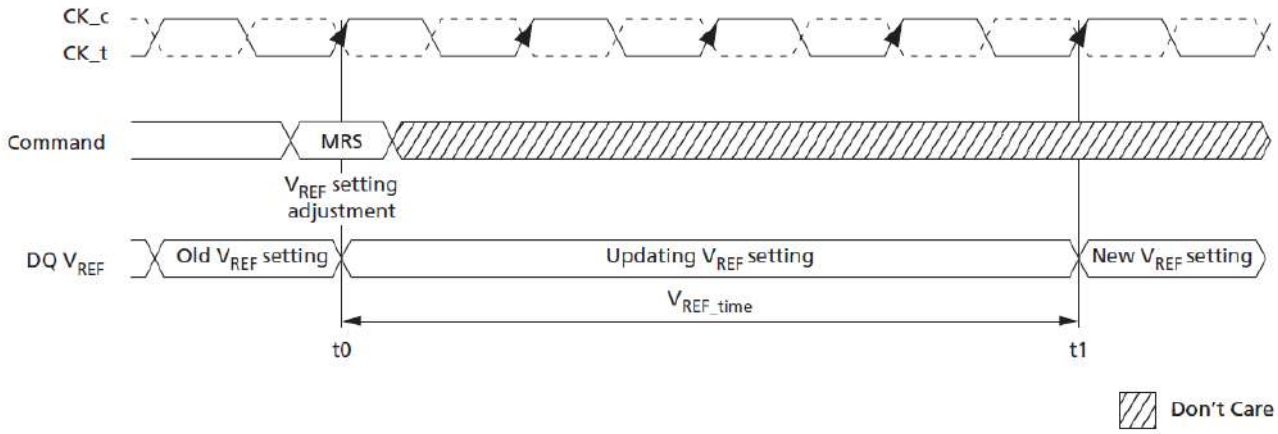

VREFDQ calibration mode is entered via an MRS command, setting MR6[7] to 1 (0 disables VREFDQ calibration mode) and setting MR6[6] to either 0 or 1 to select the desired range (MR6[5:0] are "Don't Care"). After VREFDQ calibration mode has been entered, VREFDQ calibration mode legal commands may be issued once tVREFDQE has been satisfied. Legal commands for VREFDQ calibration mode are ACT, WR, WRA, RD, RDA, PRE, DES, and MRS to set VREFDQ values, and MRS to exit VREFDQ calibration mode. Also, after VREFDQ calibration mode has been entered, “dummy” WRITE commands are allowed prior to adjusting the VREFDQ value the first time VREFDQ calibration is performed after initialization. Setting VREFDQ values requires MR6[7] be set to 1 and MR6[6] be unchanged from the initial range selection; MR6[5:0] may be set to the desired VREFDQ values. If MR6[7] is set to 0, MR6[6:0] are not written. VREF,time-short or VREF,time-long must be satisfied after each MR6 command to set VREFDQ value before the internal VREFDQ value is valid. If PDA mode is used in conjunction with VREFDQ calibration, the PDA mode requirement that only MRS commands are allowed while PDA mode is enabled is not waived. That is, the only VREFDQ calibration mode legal commands noted above that may be used are the MRS commands: MRS to set VREFDQ values and MRS to exit VREFDQ calibration mode.

The last MR6[6:0] setting written to MR6 prior to exiting VREFDQ calibration mode is the range and value used for the internal VREFDQ setting. REFDQ calibration mode may be exited when the DRAM is in idle state. After the MRS command to exit VREFDQ calibration mode has been issued, DES must be issued until tVREFDQX has been satisfied where any legal command may then be issued. VREFDQ setting should be updated if the die temperature changes too much from the calibration temperature.

The following are typical script when applying the above rules for VREFDQ calibration routine when performing VREFDQ calibration in Range 1:

An Important Notice at the end of this datasheet addresses availability, warranty, changes, use in critical applications, intellectual property matters and other important disclaimers.

- MR6[7:6]10 [5:0]XXXXXXX.
- Subsequent legal commands while in VREFDQ calibration mode: ACT, WR, WRA, RD, RDA, PRE, DES, and MRS (to set VREFDQ values and exit VREFDQ calibration mode).
- All subsequent VREFDQ calibration MR setting commands are MR6[7:6]10 [5:0]VVVVVV.
- "VVVVVV" are desired settings for VREFDQ.
- Issue ACT/WR/RD looking for pass/fail to determine VCENT (midpoint) as needed.
- To exit VREFDQ calibration, the last two VREFDQ calibration MR commands are:
- MR6[7:6]10 [5:0]VVVVVV(1) where VVVVVV(1) = desired value for VREFDQ.
- MR6[7]0 [6:0]XXXXXXX to exit VREFDQ calibration mode.

The following are typical script when applying the above rules for VREFDQ calibration routine when performing VREFDQ calibration in Range 2:

- MR6[7:6]11 [5:0]XXXXXXX.
- Subsequent legal commands while in VREFDQ calibration mode: ACT, WR, WRA, RD, RDA, PRE, DES, and MRS (to set VREFDQ values and exit VREFDQ calibration mode).
- All subsequent VREFDQ calibration MR setting commands are MR6[7:6]11[5:0]VVVVVV.
- "VVVVVV" are desired settings for VREFDQ.
- Issue ACT/WR/RD looking for pass/fail to determine VCENT (midpoint) as needed.
- To exit VREFDQ calibration, the last two VREFDQ calibration MR commands are:
- MR6[7:6]11 [5:0]VVVVVV(1) where VVVVVV(1) = desired value for VREFDQ.
- MR6[7]0 [6:0]XXXXXXX to exit VREFDQ calibration mode.

Note:

1. Range may only be set or changed when entering VREFDQ calibration mode; changing range while in or exiting VREFDQ calibration mode is illegal.

8.1.4.2 VREFDQ Training Mode Entry and Exit Timing Diagram

Figure 9: VREFDQ Trainning Mode Entry and Exit Timing Diagram

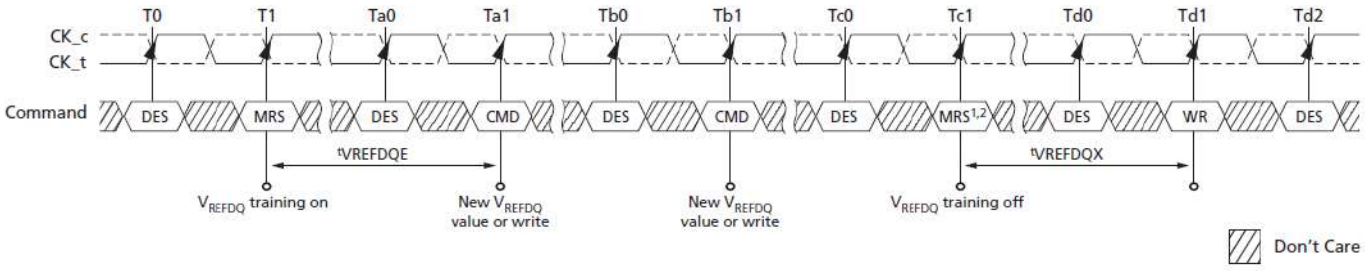

Notes:

1. New VREFDQ values are not allowed with an MRS command during calibration mode entry.
2. Depending on the step size of the latest programmed VREF value, VREF must be satisfied before disabling VREFDQ training mode.

An Important Notice at the end of this datasheet addresses availability, warranty, changes, use in critical applications, intellectual property matters and other important disclaimers.

8.1.4.3 VREF Step: Single Step Size Increment Case

Figure 10: VREF Step: Single Step Size Increment Case

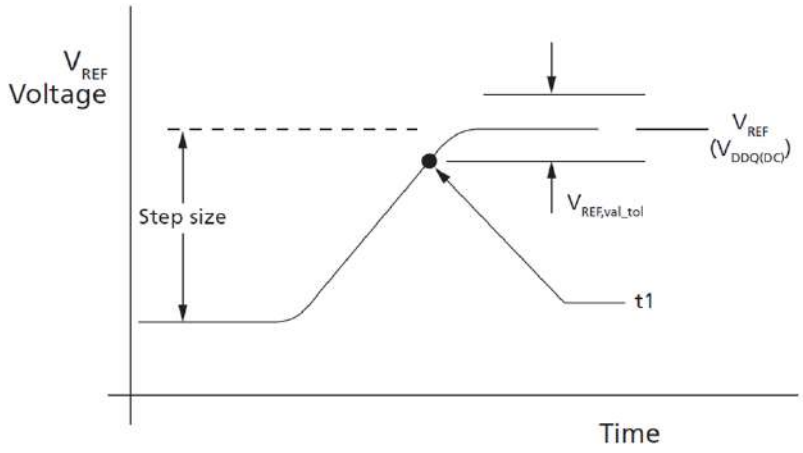

8.1.4.4 VREF Step: Single Step Size Decrement Case

Figure 11: VREF Step:Single Step Size Decrement Case

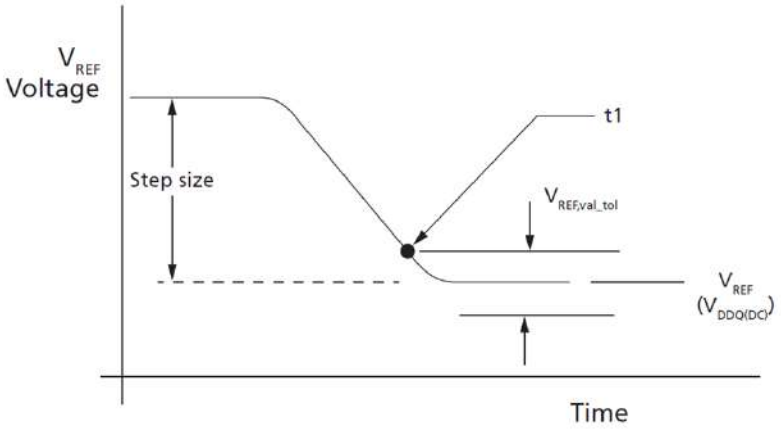

An Important Notice at the end of this datasheet addresses availability, warranty, changes, use in critical applications, intellectual property matters and other important disclaimers.

8.1.4.5 VREF Full Step: From VREF,min to VREF,maxCase

Figure 12: VREF Full Step: From VREF,min to VREF,max Case

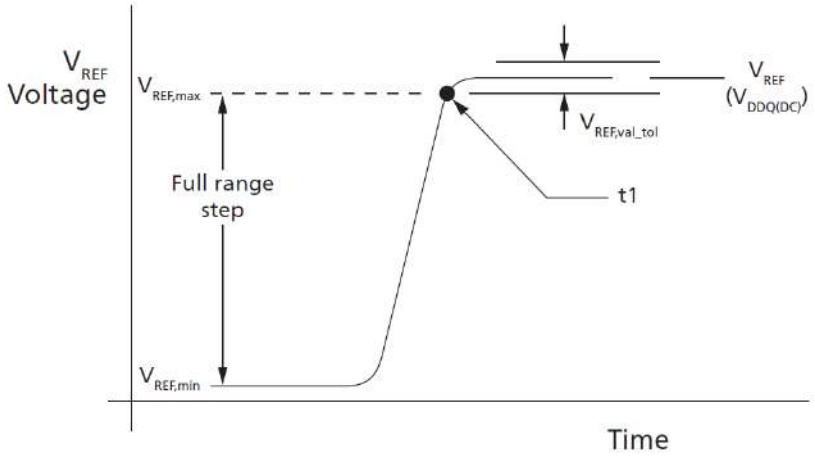

8.1.4.6 VREF Full Step: From VREF,max to VREF,minCase

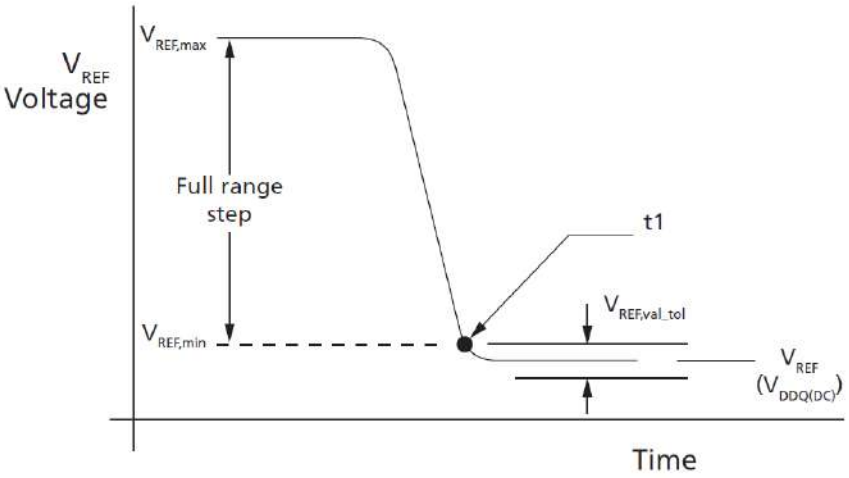

Figure 13:VREF Full Step: From VREF,max to VREF,min Case

An Important Notice at the end of this datasheet addresses availability, warranty, changes, use in critical applications, intellectual property matters and other important disclaimers.

8.1.5 VREFDQ Target Settings

The VREFDQ initial settings are largely dependents on the ODT termination settings. The table below shows all the possible initial settings available for VREFDQ training; it is unlikely the lower ODT settings would be used in most cases.

Table 25: VREFDQ Settings (VDD = 1.2V)

RON (Ω)	ODT (Ω)	Vx – VIN LOW (mV)	VREFDQ (mV)	VREFDQ (%VDD)
34	34	600	900	75%
	40	550	875	73%
	48	500	850	71%
	60	435	815	68%
	80	360	780	65%
	120	265	732	61%
	240	150	675	56%
48	34	700	950	79%
	40	655	925	77%
	48	600	900	75%
	60	535	865	72%
	80	450	825	69%
	120	345	770	64%
	240	200	700	58%

8.1.5.1 VREFDQ Equivalent Circuit

Figure 14: VREFDQ Equivalent Circuit

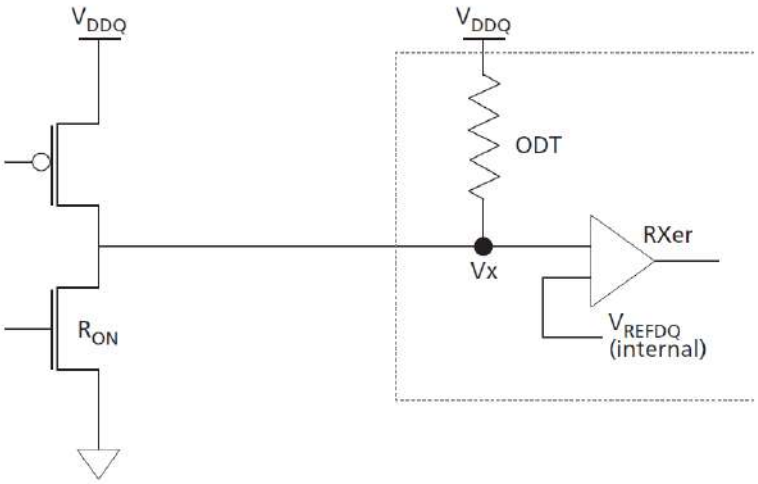

9 DC OPERATING CONDITIONS AND CHARACTERISTICS

9.1 ABSOLUTE MAXIMUM RATINGS

Table 26: Absolute maximum ratings

An Important Notice at the end of this datasheet addresses availability, warranty, changes, use in critical applications, intellectual property matters and other important disclaimers.

Parameter	Symbol	Value	Unit	Notes
Voltage on any ball relative to GND	Vin, Vout	-0.4 to 1.5	V	1,
Voltage on VDD supply relative to GND	VDD	-0.4 to 1.5	V	1,3
Voltage on VPP supply relative to GND	VPP	-0.4 to 3.0	V	4
Storage temperature	Tstg	-55 to +150	°C	1,2

Notes:

1. Permanent device damage may occur if 'ABSOLUTE MAXIMUM RATINGS' are exceeded. Functional operation should be restricted to recommended operating condition. Exposure to higher than recommended voltage for extended periods of time could affect device reliability. Stresses greater than those listed under "Absolute Maximum Ratings" may cause permanent damage to the device. This is a stress rating only and functional operation of the device at these or any other conditions above those indicated in the operational sections of this specification is not implied. Exposure to absolute maximum rating conditions for extended periods may affect reliability.
2. Storage Temperature is the case surface temperature on the center/top side of the DRAM. For the measurement conditions, refer to JESD51- 2 standard.
3. VDD must be within 300 mV of each other at all times and VREFCA must be not greater than 0.6 x VDD, When VDD are less than 500 mV; VREF may be equal to or less than 300 mV
4. VPP must be equal or greater than VDD at all times
5. Refer to JEDEC JC451 specification

9.2 Thermal considerations

9.2.1 MCP Component Operating Temperature Range

Table 27: DRAM Component Operating Temperature Range

Symbol	Temperature grade	Operating Temperature Tc / Tj	Units	Note
Toper	Normal Operating Temperature Range	Tc = 0 / Tj = 85	°C	1,2
	Extended Temperature Range	Tc = 0 / Tj = 85 and Tc = 0 / Tj = 95	°C	1,3
MCP operating temperature	Automotive A	Tc = -40 / Tj = 105	°C	
MCP operating temperature	Military M	Tc = -55 / Tj = 125	°C	

Notes:

1. Operating Temperature TOPER is the case surface temperature on the center / top side of the MCP. For measurement conditions, refer to the JEDEC document JESD51-2.
2. The Normal Temperature Range specifies the temperatures where all MCP specifications will be supported. During operation, the MCP case temperature must be maintained under all operating conditions.
3. Some applications require operation of the MCP in the Extended Temperature Range between 85°C and 95°C case temperature. Full specifications are guaranteed in this range, but the following additional conditions apply:
   a. Refresh commands must be doubled in frequency, therefore reducing the Refresh interval tREFI to 3.9 µs.
   b. If Self-Refresh operation is required in the Extended Temperature Range, then it is mandatory to either use the Manual Self-Refresh mode with Extended Temperature Range capability (MR2 A6 = 0b and MR2 A7 = 1b) or enable the optional Auto Self-Refresh mode (MR2 A6 = 1b and MR2 A7 = 0b). DDR4 SDRAMs support Auto Self-Refresh and in Extended Temperature Range.

9.2.2 tREFI by Temperature

Table 28: tREFI by Temperature

Parameter	Symbol		Max	Units
Average periodic refresh interval	tREFI	0°C ≤ Tcase ≤ 85°C (self/auto refresh)	7.8	µs

An Important Notice at the end of this datasheet addresses availability, warranty, changes, use in critical applications, intellectual property matters and other important disclaimers.

Parameter	Symbol		Max	Units
		85°C ≤ Tcase ≤ 95°C (1)	3.9	µs
		95°C ≤ Tcase ≤ 105°C (manual refresh)	1.95	µs
		105°C ≤ Tcase ≤ 125°C (manual refresh) (2)	0.4876	µs

Notes:

1. If Self-Refresh operation is required in the Extended Temperature Range, then it is mandatory to either use the Manual Self-Refresh mode with Extended Temperature Range capability (MR2 A6 = 0b and MR2 A7 = 1b) or enable the optional Auto Self-Refresh mode (MR2 A6 = 1b and MR2 A7 = 0b). DDR4 SDRAMs support Auto Self-Refresh and in Extended Temperature Range.
2. Teledyne e2v warrants full operational reliability for the device up to a maximum **junction** temperature of T**j** = 125 °C.

9.3 DC OPERATING VOLTAGE

Table 29: DC operating voltage (pod12)

Symbol	Parameter	Rating			Units	Notes
		Min	Typ	Max		
VDD	Supply Voltage VDD: PC4: 1.2V ±5%	1.14	1.2	1.26	V	1,2,3
Vpp	2.5V +10% / -5%	2.375	2.5	2.75	V	3
VTT	VTT should be set to VDD/2.	0.57	0.6	0.76	V	4,5

Notes:

1. JESD8-24 specifies Vref to be 70% of VDD.
2. DC bandwidth is limited to 20MHz.,
3. POD12 1.2V Pseudo Open Drain Interface has a VDD value of 1.2V but the reference voltage allows POD12 to be used with other VDD values. POD12 signals have pull-up-only parallel input termination and have an asymmetric output drive impedance. For example, if the output drivers were using a 60 Ω pull-up drive impedance then the pull-down drivers would be expected to produce a 40 Ω pull-down drive impedance. POD12 does not explicitly call for series termination resistors, so it is suitable for point-to-point as well as multi-drop stub environments which may require some additional termination.
4. VTT voltage regulator must have a source and sink capability, up to 3A peak.
5. VTT is limited to 0.76V MAX when the power ramp is complete (but normal operation should be 0.6V on VTT).

An Important Notice at the end of this datasheet addresses availability, warranty, changes, use in critical applications, intellectual property matters and other important disclaimers.

9.4 DDR4 power consumption

The DDR4 power consumption during normal operation strongly depends on the usage profile (transfer speed, write and read duty cycles, …). For this reason, it is not possible to provide power key figures fitting all applications. Teledyne e2v provides a power consumption estimation spreadsheet that should be used to estimate the power drawn by the DDR4 on VDD and VPP supplies. This power calculation tool is available upon request.

The maximum VDD current consumed by the DDR4 memory during the initialization is provided in the following table:

Table 30 : Power consumption

Symbol	Tcase (°C)	Value Rev. A	Value Rev. B	Unit
Maximum write current on VDD(1)	25	1.1	2.5	A
	125	1.2	2.7	A
Maximum read current on VDD(1)	25	1	2.3	A
	125	1.2	2.5	A
Maximum manual refresh current on VDD(1)	25	0.7	2	A
	125	0.8	2.1	A

Note:

1. Value measured in automatic test equipment, using an NXP Layerscape processor LX2160 for the DDR4 controller. Settings used: CL-tRCD-tRP = 17-17-17, tREFI = 0.4876µs, speed: 2400MT/s.

Table 31: Maximum current

Supply		Maximum	Unit
VTT		±223	mA
VREFCA leakage	4GB Rev. A	±10	µA
	4GB / 8GB Rev. B	±18	µA

An Important Notice at the end of this datasheet addresses availability, warranty, changes, use in critical applications, intellectual property matters and other important disclaimers.

10 AC OPERATING CONDITIONS AND CHARACTERISTICS

10.1 Speed Bins by Speed Grade

Table 32: 1866MT/s Speed Bins and Operating Conditions

Speed Bin				DDR4-1866		Unit	Note
CL-nRCD-nRP				13-13-13			
Parameter			Symbol	Min	Max		
Internal read command to first data			tAA	13.9214 (13.50)	19	ns	5
Internal read command to first data with read DBI enabled			tAA_DBI	tAA(min) + 2nCK	tAA(max) +2nCK	ns	
ACT to internal read or write delay time			tRCD	13.92 (13.50)	-	ns	5
PRE command period			tRP	13.92 (13.50)	-	ns	5
ACT to PRE command period			tRAS	34	9 x tREFI	ns	
ACT to ACT or REF command period			tRC	47.92 (47.50)	-	ns	5
	Normal	Read DBI					
CWL=9	CL=9	CL=11	tCK(AVG)	Reserved		ns	1,2,3,4,6
	CL=10	CL=12		1.5	1.9		
CWL=9,11	CL=11	CL=13	tCK(AVG)	Reserved		ns	1,2,3,4,5
	CL=12	CL=14		1.25	<1.5		
CWL=10,12	CL=13	CL=15	tCK(AVG)	Reserved		ns	1,2,3,4
	CL=14	CL=16		1.071	<1.250		
Supported CL Settings				10,12,14		nCK	7
Supported CL Settings with read DBI				12,14,16		nCK	
Supported CWL Settings				9-12		nCK	

Notes:

1. Start of internal write transaction is defined as follows:
   a. For BL8 (Fixed by MRS and on-the-fly): Rising clock edge 4 clock cycles after WL.
   b. For BC4 (on-the-fly): Rising clock edge 4 clock cycles after WL.
   c. For BC4 (fixed by MRS): Rising clock edge 2 clock cycles after WL.
2. A separate timing parameter will cover the delay from write to read when CRC and DM are simultaneously enabled
3. Commands requiring a locked DLL are: READ (and RAP) and synchronous ODT commands.
4. tWR is defined in ns, for calculation of tWRPDEN it is necessary to round up tWR/tCK to the next integer.
5. CKE is allowed to be registered low while operations such as row activation, precharge, autoprecharge or refresh are in progress, but power-down IDD spec will not be applied until finishing those operations.
6. When CRC and DM are both enabled tWTR_S_CRC_DM is used in place of tWTR_S.
7. The max values are system dependent.

An Important Notice at the end of this datasheet addresses availability, warranty, changes, use in critical applications, intellectual property matters and other important disclaimers.

Table 33: 2133 MT/s Speed Bins and Operating Conditions

Speed Bin				DDR4-2133		Unit	Note
CL-nRCD-nRP				15-15-15			
Parameter			Symbol	Min	Max		
Internal read command to first data			tAA	14.0614 (13.50)	19	ns	5
Internal read command to first data with read DBI enabled			tAA_DBI	tAA(min) + 3nCK	tAA(max) + 3nCK	ns	
ACT to internal read or write delay time			tRCD	14.06 (13.50)	-	ns	5
PRE command period			tRP	14.06 (13.50)	-	ns	5
ACT to PRE command period			tRAS	33	9 x tREFI	ns	
ACT to ACT or REF command period			tRC	47.06 (46.50)	-	ns	5
	Normal	Read DBI					
CWL = 9	CL = 9	CL = 11	tCK(AVG)	Reserved		ns	1,2,3,4,6
	CL = 10	CL = 12		1.5	1.9		
CWL = 9,11	CL = 11	CL = 13	tCK(AVG)	Reserved		ns	1,2,3,4,5
	CL = 12	CL = 14		1.25	<1.5		
CWL = 10,12	CL = 13	CL = 15	tCK(AVG)	Reserved		ns	1,2,3,4,5
	CL = 14	CL = 16		1.071	<1.25		
CWL = 11,14	CL = 15	CL = 18	tCK(AVG)	Reserved		ns	1,2,3,4
	CL = 16	CL = 19		0.937	<1.071		
Supported CL Settings				10,12,14,16		nCK	7
Supported CL Settings with read DBI				12,14,16,19		nCK	
Supported CWL Settings				9,10,11,12,14		nCK	

Notes:

1. Start of internal write transaction is defined as follows:
    a. For BL8 (Fixed by MRS and on-the-fly): Rising clock edge 4 clock cycles after WL.
    b. For BC4 (on-the-fly): Rising clock edge 4 clock cycles after WL.
    c. For BC4 (fixed by MRS): Rising clock edge 2 clock cycles after WL.
2. A separate timing parameter will cover the delay from write to read when CRC and DM are simultaneously enabled
3. Commands requiring a locked DLL are: READ (and RAP) and synchronous ODT commands.
4. tWR is defined in ns, for calculation of tWRPDEN it is necessary to round up tWR/tCK to the next integer.
5. CKE is allowed to be registered low while operations such as row activation, precharge, autoprecharge or refresh are in progress, but power-down IDD spec will not be applied until finishing those operations.
6. When CRC and DM are both enabled tWTR_S_CRC_DM is used in place of tWTR_S.
7. The max values are system dependent.

An Important Notice at the end of this datasheet addresses availability, warranty, changes, use in critical applications, intellectual property matters and other important disclaimers.

Table 34: 2400 MT/s Speed Bins and Operating Conditions

Speed Bin				DDR4-2400		Unit	Note
CL-nRCD-nRP				17-17-17			
Parameter			Symbol	Min	Max		
Internal read command to first data			tAA	14.16 (13.75)	19	ns	5
Internal read command to first data with read DBI enabled			tAA_DBI	tAA(min) + 3nCK	tAA(max) + 3nCK	ns	
ACT to internal read or write delay time			tRCD	14.16 (13.75)	-	ns	5
PRE command period			tRP	14.16 (13.75)	-	ns	5
ACT to PRE command period			tRAS	32	9 x tREFI	ns	
ACT to ACT or REF command period			tRC	46.16 (45.75)	-	ns	5
	Normal	Read DBI					
CWL = 9	CL = 9	CL = 11	tCK(AVG)	Reserved		ns	1,2,3,4,6
	CL = 10	CL = 12		1.5	1.9		
CWL = 9,11	CL = 11	CL = 13	tCK(AVG)	1.25	<1.5	ns	1,2,3,4,5
	CL = 12	CL = 14					
CWL = 10,12	CL = 13	CL = 15	tCK(AVG)	1.071	<1.25	ns	1,2,3,4,5
	CL = 14	CL = 16					
CWL = 11,14	CL = 15	CL = 18	tCK(AVG)	0.937	<1.071	ns	1,2,3,4
	CL = 16	CL = 19					
CWL = 12,16	CL = 16	CL = 19	tCK(AVG)	Reserved		ns	1,2,3,4
	CL = 17	CL = 20		0.833	<0.937		
	CL = 18	CL = 21					
Supported CL Settings				10-18		nCK	7
Supported CL Settings with read DBI				12-16,18-21		nCK	
Supported CWL Settings				9-12,14,16		nCK	

Notes:

1. Start of internal write transaction is defined as follows:
    a. For BL8 (Fixed by MRS and on-the-fly): Rising clock edge 4 clock cycles after WL.
    b. For BC4 (on-the-fly): Rising clock edge 4 clock cycles after WL.
    c. For BC4 (fixed by MRS): Rising clock edge 2 clock cycles after WL.
2. A separate timing parameter will cover the delay from write to read when CRC and DM are simultaneously enabled
3. Commands requiring a locked DLL are: READ (and RAP) and synchronous ODT commands.
4. tWR is defined in ns, for calculation of tWRPDEN it is necessary to round up tWR/tCK to the next integer.
5. CKE is allowed to be registered low while operations such as row activation, precharge, autoprecharge or refresh are in progress, but power-down IDD spec will not be applied until finishing those operations.
6. When CRC and DM are both enabled tWTR_S_CRC_DM is used in place of tWTR_S.
7. The max values are system dependent.

An Important Notice at the end of this datasheet addresses availability, warranty, changes, use in critical applications, intellectual property matters and other important disclaimers.

Table 35: Timing Parameters for Speed Grades 1866 to 2400

Speed			DDR4-1866		DDR4-2133		DDR4-2400		Units	Note
Parameter		Symbol	MIN	MAX	MIN	MAX	MIN	MAX		
Clock Timing										
Clock period average (DLL off mode)		^{t}CK(DLL_OFF)	8	20	8	20	8	20	ns	
Average Clock Period		^{t}CK(avg,DLL_ON)	1.25	1.9	0.937	1.9	0.833	1.9	ns	3,13
Average high pulse width		^{t}CH(avg)	0.48	0.52	0.48	0.52	0.48	0.52	^{t}CK(avg)	
Average low pulse width		^{t}CL(avg)	0.48	0.52	0.48	0.52	0.48	0.52	^{t}CK(avg)	
Clock period jitter	Total	^{t}JITper_tot	-54	54	-47	47	-42	42	ps	17,18
	Deterministic	^{t}JITper_dj	-27	27	-23	23	-21	21	ps	17
	DLL locking	^{t}JITper_lck	-43	43	-38	38	-33	33	ps	
Absolute Clock Period		^{t}CK(abs)	Min = ^{t}CK(avg)$_{min}$ + JIT(per)$_{min_tot}$ Max = ^{t}CK(avg)$_{max}$ + ^{t}JIT(per)$_{max_tot}$						ps	
Absolute clock HIGH pulse width		^{t}CH(abs)	0.45	-	0.45	-	0.45	-	^{t}CK(avg)	
Absolute clock Low pulse width		^{t}CL(abs)	0.45	-	0.45	-	0.45	-	^{t}CK(avg)	
Cycle to Cycle jitter	Total	^{t}JITcc_tot	-	107	-	94	-	83	ps	
	DLL locking	^{t}JITcc_lck	-	86	-	75	-	67	ps	
Cumulative error across	2 cycles	^{t}ERR(2per)	-79	79	-69	69	-61	61	ps	
	3 cycles	^{t}ERR(3per)	-94	94	-82	82	-73	73	ps	
	4 cycles	^{t}ERR(4per)	-104	104	-91	91	-81	81	ps	
	5 cycles	^{t}ERR(5per)	-112	112	-98	98	-87	87	ps	
	6 cycles	^{t}ERR(6per)	-119	119	-104	104	-92	92	ps	
	7 cycles	^{t}ERR(7per)	-124	124	-109	109	-97	97	ps	
	8 cycles	^{t}ERR(8per)	-129	129	-113	113	-101	101	ps	
	9 cycles	^{t}ERR(9per)	-134	134	-117	117	-104	104	ps	
	10 cycles	tERR(10per)	-137	137	-120	120	-107	107	ps	
	11 cycles	^{t}ERR(11per)	-141	141	-123	123	-110	110	ps	
	12 cycles	^{t}ERR(12per)	-144	144	-126	126	-112	112	ps	
	n = 13,14…49, 50 cycles	^{t}ERR(nper)	^{t}ERRnper MIN=(1+0.68ln[n]) x ^{t}JITper_tot MIN		^{t}ERRnper MAX=(1+0.68ln[n]) x ^{t}JITper_tot MAX		^{t}ERRnper MIN=(1+0.68ln[n]) x ^{t}JITper_tot MIN		ps	
DQ Input Timing										
Data setup time to DQS_t,DQS_c	Base (calibrated V_{REF})	^{t}DS	Approximately 0.15^{t}CK to 0.28^{t}CK						-	
	Non-calibrated V_{REF}	^{t}PDA_S	Minimum of 0.5UI						UI	22

An Important Notice at the end of this datasheet addresses availability, warranty, changes, use in critical applications, intellectual property matters and other important disclaimers.

Speed			DDR4-1866		DDR4-2133		DDR4-2400		Units	Note
Parameter		Symbol	MIN	MAX	MIN	MAX	MIN	MAX		
Data hold time from DQS_t,DQS_c	Base (calibrated V_{REF})	^{t}DH	Approximately 0.15^{t}CK to 0.28^{t}CK						-	
	Non-calibrated V_{REF}	$^{t}PDA_H$	Minimum of 0.5UI						UI	33
DQ and DM minimum data pulse width for each input		$^{t}DIPW$	0.58	-	0.58	-	0.58	-	UI	
DQ Output Timing (DLL enabled)										
DQS_t, DQS_c to DQ skew, per gourp, per access		$^{t}DQSQ$	-	0.16	-	0.16	-	0.17	UI	
DQ output hold time from DQS_t,DQS_c		^{t}QH	0.76	-	0.76	-	0.74	-	UI	
Data Valid Window per device: ^{t}QH-$^{t}DQSQ$ each device's output per UI		$^{1}DVW_{d}$	0.63	-	0.64	-	0.64	-	UI	
Data Valid Windo per device, per pin:^{t}QH-$^{t}DQSQ$ each device's output per UI		$^{t}DVW_{p}$	0.66	-	0.69	-	0.72	-	UI	
DQ Low-Z time from CK_t,CK_c		$^{t}LZDQ$	-390	195	-360	180	-330	175	ps	
DQ High-Z time form CK_t,CK_c		$^{t}HZDQ$	-	195	-	180	-	175	ps	
DQ Strobe Input Timing										
DQS_t,DQS_c rising edge to CK_t,CK_c rising edge for 1^{t}CKpreamble		$^{t}DQSS_{1ck}$	-0.27	0.27	-0.27	0.27	-0.27	0.27	CK	
DQS_t,DQS_c rising edge to CK_t,CK_c rising edge for 2^{t}CKpreamble		$^{t}DQSS_{2ck}$	-0.50	0.50	-0.50	0.50	-0.50	0.50	CK	
DQS_t,DQS_c differential input low pulse width		$^{t}DQSL$	0.46	0.54	0.46	0.54	0.46	0.54	CK	
DQS_t,DQS_c differential input high pulse width		$^{t}DQSH$	0.46	0.54	0.46	0.54	0.46	0.54	CK	
DQS_t,DQS_c falling edge setup to CK_t,CK_c rising edge		^{t}DSS	0.18	-	0.18	-	0.18	-	CK	
DQS_t,DQS_c falling edge hold from CK_t,CK_c rising edge		^{t}DSH	0.18	-	0.18	-	0.18	-	CK	
DQS_t,DQS_c differential WRITE preamble for 1^{t}CKpreamble		$^{t}WPRE_{1ck}$	0.9	-	0.9	-	0.9	-	CK	
DQS_t,DQS_c differential WRITE preamble for 2^{t}CKpreamble		$^{t}WPRE_{2ck}$	1.8	-	1.8	-	1.8	-	CK	
DQS_t,DQS_c differential WRITE postamble		$^{t}WPST$	0.33	-	0.33	-	0.33	-	CK	

An Important Notice at the end of this datasheet addresses availability, warranty, changes, use in critical applications, intellectual property matters and other important disclaimers.

Speed		DDR4-1866		DDR4-2133		DDR4-2400		Units	Note
Parameter	Symbol	MIN	MAX	MIN	MAX	MIN	MAX		
DQS Strobe Output Timing (DLL enabled)									
DQS_t,DQS_c rising edge output access time from rising CK_t,CK_c	^{t}DQSCK	-195	195	-180	180	-175	175	ps	
DQS_t,DQS_c rising edge output variance window per DRAM	^{t}DQSCKi	-	330	-	310	-	290	ps	
DQS_t,DQS_c differential output high time	^{t}QSH	0.4	-	0.4	-	0.4	-	CK	
DQS_t,DQS_c differential output low time	^{t}QSL	0.4	-	0.4	-	0.4	-	CK	
DQS_t,DQS_c Low-Z time (RL-1)	^{t}LZDQS	-390	195	-360	180	-330	175	ps	
DQS_t,DQS_c High-Z time (RL-1)	^{t}HZDQS	-	195	-	180	-	175	ps	
DQS_t,DQS_c differential READ preamble for 1^{t}CKpreamble	$^{t}RPRE_{1ck}$	0.9	-	0.9	-	0.9	-	CK	20
DQS_t,DQS_c differential READ preamble for 2^{t}CKpreamble	$^{t}RPRE_{2ck}$	1.8	-	1.8	-	1.8	-	CK	20
DQS_t,DQS_c differential READ postamble	^{t}RPST	0.33	-	0.33	-	0.33	-	CK	21
Command and Address Timing									
DLL locking time	^{t}DLLK	597	-	768	-	768	-	CK	2,4
CMD, ADDR setup time to CK_t, CK_c Base referenced to VIH(AC) and VIL(AC)	Base	^{t}IS	100	-	80	0	62	-	ps	
	V_{REFCA}	$^{t}IS_{VREF}$	200	-	180	-	162	-	ps	
CMD, ADDR hold time to CK_t, CK_c Base referenced to VIH(AC) and VIL(AC)	Base	^{t}IH	125	-	105	-	87	-	ps	
	V_{REFCA}	$^{t}IH_{VREF}$	200	-	180	-	162	-	ps	
CTRL,ADDR pulse width for each input		^{t}IPW	525	-	460	-	410	-	ps	
ACTIVATE to internal READ or WRITE delay		^{t}RCD	See Speed Bin Tables for ^{t}RCD						ns	
PRECHARGE command period		^{t}RP	See Speed Bin Tables for ^{t}RP						ns	
ACTIVATE to PRECHARGE command period		^{t}RAS	See Speed Bin Tables for ^{t}RAS						ns	12
ACTIVATE to ACTIVATE or REFcommand period		^{t}RC	See Speed Bin Tables for ^{t}RC						ns	12

An Important Notice at the end of this datasheet addresses availability, warranty, changes, use in critical applications, intellectual property matters and other important disclaimers.

Speed		DDR4-1866		DDR4-2133		DDR4-2400		Units	Note
Parameter	Symbol	MIN	MAX	MIN	MAX	MIN	MAX		
ACTIVATE to ACTIVATE or command period to different bank groups for Rev. B	^{t}RRD_S (1KB)	MIN=greater of 4CK or 4.2ns		MIN=greater of 4CK or 3.7ns		MIN=greater of 4CK or 3.3ns		CK	1
ACTIVATE to ACTIVATE or command period to different bank groups for Rev. A	^{t}RRD_S (2KB)	MIN=greater of 4CK or 5.3ns		MIN=greater of 4CK or 5.3ns		MIN=greater of 4CK or 5.3ns		CK	1
ACTIVATE to ACTIVATE or command period to same bank groups for Rev. B	^{t}RRD_L (1KB)	MIN=greater of 4CK or 5.3ns		MIN=greater of 4CK or 5.3ns		MIN=greater of 4CK or 4.9ns		CK	1
ACTIVATE to ACTIVATE or command period to same bank groups for Rev. A	^{t}RRD_L (2KB)	MIN=greater of 4CK or 6.4ns		MIN=greater of 4CK or 6.4ns		MIN=greater of 4CK or 6.4ns		CK	1
Four ACTIVATE windows for Rev. B	^{t}FAW (1KB)	MIN=greater of 20CK or 23ns		MIN=greater of 20CK or 21ns		MIN=greater of 20CK or 21ns		ns	
Four ACTIVATE windows for Rev. A	^{t}FAW (2KB)	MIN=greater of 28CK or 30ns		MIN=greater of 28CK or 30ns		MIN=greater of 28CK or 30ns		ns	
WRITE recovery time	^{t}WR	MIN = 15ns						ns	5,9,1
	^{t}WR$_2$	MIN = 1CK + ^{t}WR						CK	5,10,1
WRITE recovery time when CRC and DM are both enabled	^{t}WR_CRC_DM	MIN = ^{t}WR + greater of (5CK or 3.75ns)						CK	6,9,1
	^{t}WR_CRC_DM$_2$	MIN = 1CK + ^{t}WR_CRC_DM						CK	6,10,1
Delay from start of internal WRITE transaction to internal READ command – Same bank group	^{t}WTR_L	MIN = greater of 4CK or 7.5ns						CK	5,9,1
	^{t}WTR_L$_2$	MIN = 1CK+^{t}WTR_L						CK	5,10,1
Delay from start of internal WRITE transaction to internal READ command – Same bank group when CRC and DM are both enabled	^{t}WTR_L_CRC_DM	MIN = ^{t}WTR_L + greater of (5CK or 3.75ns)						CK	6,9,1
	^{t}WTR_L_CRC_DM$_2$	MIN = 1CK + ^{t}WTR_L_CRC_DM						CK	6,10,1
Delay from start of internal WRITE transaction to internal READ command – different bank group	^{t}WTR_S	MIN = greater of (2CK or 2.5ns)						CK	5,7,8,9,1
	^{t}WTR_S$_2$	MIN = 1CK + ^{t}WTR_S						CK	5,7,8,10,1
Delay from start of internal WRITE transaction to internal READ command – different bank group when CRC and DM are both enabled	^{t}WTR_S_CRC_DM	MIN = ^{t}WTR_S + greater of (5CK or 3.75ns)						CK	6,7,8,9,1
	^{t}WTR_S_CRC_DM$_2$	MIN = 1CK + ^{t}WTR_S_CRC_DM						CK	6,7,8,10,1
READ to PRECHARGE time	^{t}RTP	MIN = greater of 4CK or 7.5ns						CK	1
CAS_n to CAS_n command delay to different bank group	^{t}CCD_S	4	-	4	-	4	-	CK	
CAS_n to CAS_n command delay to same bank group	^{t}CCD_L	MIN = greater of 4CK or 5.355ns	-	MIN = greater of 4CK or 5.355ns	-	MIN = greater of 4CK or 5ns	-	CK	14

An Important Notice at the end of this datasheet addresses availability, warranty, changes, use in critical applications, intellectual property matters and other important disclaimers.

Speed		DDR4-1866		DDR4-2133		DDR4-2400		Units	Note
Parameter	Symbol	MIN	MAX	MIN	MAX	MIN	MAX		
Auto precharge write recovery + precharge time	^{t}DAL (MIN)	MIN = WR + ROUND^{t}RP/^{t}CK (AVG); MAX=N/A						CK	8
MRS Command Timing									
MRS command cycle time	^{t}MRD	8	-	8	-	8	-	CK	
MRS command cycle time in PDA mode	^{t}MRD_PDA	MIN = greater of (16nCK, 10ns)						CK	1
MRS command cycle time in CAL mode	^{t}MRD_CAL	MIN=^{t}MOD + ^{t}CAL						CK	
MRS command update delay	^{t}MOD	MIN = greater of (24nCLK, 15ns)						CK	1
MRS command update delay in PDA mode	^{t}MOD_PDA	MIN = ^{t}MOD						CK	
MRS command update delay in CAL mode	^{t}MOD_CAL	MIN = ^{t}MOD + ^{t}CAL						CK	
MRS command to DGS drive in preamble training	^{t}SDO	MIN = ^{t}MOD + 9ns						ns	
MPR Command Timing									
Multipurpose register recovery time	^{t}MPRR	MIN = 1CK						CK	
Multipurpose register write recovery time	^{1}WR_MPR	MIN = ^{t}MOD + AL + PL							
CRC Error Reporting Timing									
CRC error to ALERT_n latency	^{t}CRC_ALERT	3	13	3	13	3	13	ns	
CRC Alert_n pulse width	^{t}CRC_ALERT_PW	6	10	6	10	6	10	CK	
Parity latency	PL	4	-	4	-	5	-	CK	
Command uncertain to be executed during this time	^{t}PAR_UNKNOWN	-	PL	-	PL	-	PL	CK	
Delay from errant command to ALERT_n assertion	^{t}PAR_ALERT_ON	-	PL + 6ns	-	PL + 6ns	-	PL + 6ns	CK	
Pulse width of ALERT_n signal when asserted	^{t}PAR_ALERT_PW	56	112	64	128	72	144	CK	
Time from alert asserted until DES commands required in persistent CA parity mode	^{t}PAR_ALERT_RS_P	-	50	-	57	-	64	CL	
CAL Timing									
CS_n to command address latency	^{t}CAL	4	-	4	-	5	-	CK	19
CS_n to command address latency in gear-down mode	^{t}CALg	N/A	-	N/A	-	N/A	-	CK	
MPSM Timing									
Command path disable delay upon MPSM entry	^{t}MPED	MIN = ^{t}MOD (MIN) + ^{t}CPED (MIN)						CK	1
Valid clock requirement after MPSM entry	^{t}CKMPE	MIN = ^{t}MOD (MIN) + ^{t}CPED (MIN)						CK	1

An Important Notice at the end of this datasheet addresses availability, warranty, changes, use in critical applications, intellectual property matters and other important disclaimers.

Speed		DDR4-1866		DDR4-2133		DDR4-2400		Units	Note
Parameter	Symbol	MIN	MAX	MIN	MAX	MIN	MAX		
Valid clock requirement after MPSM exit	^{t}CKMPX	MIN = ^{t}CKSRX (MIN)						CK	1
Exit MPSM to commands not requiring a locked DLL	^{t}XMP	^{t}XS (MIN)						CK	
Exit MPSM to commands requiring a locked DLL	^{t}XMPDLL	MIN = ^{t}XMP (MIN) + ^{t}XSDLL (MIN)						CK	1
CS setup time to CKE	^{t}MPX_S	MIN – ^{t}IS (MIN) + ^{t}IH (MIN)						ns	
CS_n HIGH hold time to CKE rising edge	^{t}MPX_HH	MIN = ^{t}XP						ns	
CS_n LOW hold time to CKE rising edge	^{t}MPX_LH	12	^{t}XMP-10ns	12	^{t}XMP-10ns	12	^{t}XMP-10ns	ns	
Connectivity Test Timing									
TEN pin HIGH to CS_n LOW – Enter CT mode	^{t}CT_Enable	200	-	200	-	200	-	ns	
CS_n LOW and valid input to valid output	^{t}CT_Valid	-	200	-	200	-	200	ns	
CK_t, CK_c valid and CKE HIGH after TEN goes HIGH	^{t}CTCKE_Valid	10	-	10	-	10	-	ns	
Calibration and VREFDQ Train Timing									
ZQCL command: Long calibration time	POWER-UP and RESET operation	^{t}ZQinit	1024	-	1024	-	1024	-	CK	
	Normal operation	^{t}ZQoper	512	-	512	-	512	-	CK	
ZQCS command: Short calibration time		^{t}ZQCS	128	-	128	-	128	-	CK	
The V_{REF} increment/decrement step time		VREF_time	MIN = 150 ns						ns	
Enter V_{REFDQ} training mode to the first write or V_{REFDQ} MRS command delay		^{t}VREFDQE	MIN = 150 ns						ns	
Exit V_{REFDQ} training mode to the first write command delay		^{t}VREFDQX	MIN = 150 ns						ns	
Initialization and Reset Timing									
Exit reset from CKE HIGH to a valid command		^{t}XPR	MIN = greater of 5CK or ^{t}RFC (MIN) + 10 ns						CK	1
RESET_L pulse low after power stable		^{t}PW_RESET_S	1.0	-	1.0	-	1.0	-	µs	
RESET_L pulse low at power up		^{t}PW_RESET_L	200	-	200	-	200	-	µs	
Begin power supply ramp to power supplies stable		^{t}VDDPR	MIN = N/A; MAX = 200						ms	
RESET_n LOW to power supplies stable		^{t}RPS	MIN = 0; MAX = 0						ns	
Refresh Timing									
Refresh to ACTIVATE or		^{t}RFC1	MIN = 350						ns	1,11

An Important Notice at the end of this datasheet addresses availability, warranty, changes, use in critical applications, intellectual property matters and other important disclaimers.

Speed			DDR4-1866		DDR4-2133		DDR4-2400		Units	Note
Parameter		Symbol	MIN	MAX	MIN	MAX	MIN	MAX		
REFRESH command period (all bank groups)		tRFC2	MIN = 260						ns	1,11
		tRFC4	MIN = 160						ns	1,11
Average periodic refresh interval	-40°C ≤T_C≤85°C	tREFI	MIN = N/A;MAX = 7.8						µs	11
	85°C≤T_C≤ 95°C	tREFI	MIN = N/A;MAX = 3.9						µs	11
	95°C≤T_C≤ 105°C	tREFI	MIN = N/A;MAX = 1.95						µs	11
Self Refresh Timing										
Exit self refresh commands not requiring a locked DLL		tXS	MIN= = tRFC + 10ns						ns	1
Exit self refresh commands not requiring a locked DLL in self refresh abort		tXS_ABORT	MIN = tRFC4 + 10ns						ns	1
Exit self refresh to ZQCL, ZQCS and MRS (CL, CWL, WR, RTP and gear-down)		tXS_FAST	MIN= tRFC4 + 10ns						ns	1
Exit self refresh commands requiring a locked DLL		tXSDLL	MIN= tDLLK (MIN)						CK	1
Minimum CKE low pulse width for self refresh entry to self refresh exit timing		tCKESR	MIN = tCKE (MIN) + 1*n*CK						CK	1
Minimum CKE low pulse width for self refresh entry to self refresh exit timing when CA parity is enabled		tCKESR_PAR	MIN = tCKE (MIN) + 1*n*CK + PL						CK	1
Valid clocks after self refresh entry (SRE) or power-down entry (PDE)		tCKSRE	MIN=greater of (5CK, 10ns)						CK,ns	1
Valid clock requirement after self refresh entry or power-down when CA parity is enabled		tCKSRE_PAR	MIN = greater (5CK, 10ns) + PL						CK,ns	1
Valid clocks before self refresh exit (SRX) or power-down exit (PDX), or reset exit		tCKSRX	MIN = greater of (5CK, 10ns)						CK,ns	1
Power-Down Timing										
Exit power-down with DLL on to any valid command		tXP	MIN = greater of 4CK or 6ns						CK,ns	1
Exit power-down with DLL on to any valid command when CA parity is enabled		tXP_PAR	MIN = (greater of 4CK or 6ns) + PL						CK,ns	1
CKE MIN pulse width		tCKE (MIN)	MIN = greater of 3CK or 5ns						CK,ns	1
Command pass disable delay		tCPDED	4	-	4	-	4	-	CK	

An Important Notice at the end of this datasheet addresses availability, warranty, changes, use in critical applications, intellectual property matters and other important disclaimers.

Speed		DDR4-1866		DDR4-2133		DDR4-2400		Units	Note
Parameter	Symbol	MIN	MAX	MIN	MAX	MIN	MAX		
Power-down entry to power-down exit timing	tPD	MIN = tCKE (MIN); MAX = 9 x tREFI						CK	
Begin power-down period prior to CKE registered HIGH	tANPD	WL-1CK						CK	
Power-down entry period: ODT either synchronous or asynchronous	PDE	Greater of tANPD or tRFC – REFRESH command to CKE LOW time						CK	
Power-down exit period: ODT either synchronous or asynchronous	PDX	tANPD + tXSDLL						CK	
Power-Down Entry Minimum timing									
ACTIVATE command to power-down entry	tACTPDEN	1	-	2	-	2	-	CK	
PRECHARGE/PRECHARGE ALL command to power-down entry	tPRPDEN	1	-	2	-	2	-	CK	
REFRESH command to power-down entry	tREFDEN	1	-	2	-	2	-	CK	
MRS command to power-down entry	tMRSDEN	MIN= tMOD (MIN)						CK	1
READ/READ with auto precharge command to power-down entry	tRDPDEN	MIN = RL + 4 + 1						CK	1
WRITE command to power-down entry (BL8OTF, BL8MRS, BC4OTF)	tWRPDEN	MIN = WL + 4 + tWR/tCK (AVG)						CK	1
WRITE command to power-down entry (BC4MRS)	tWRPBC4DEN	MIN = WL + 2 + tWR/tCK (AVG)						CK	1
WRITE with auto precharge command to power-down entry (BL8OTF, BL8MRS, BC4OTF)	tWRAPDEN	MIN = WL + 4 + WR + 1						CK	1
WRITE with auto precharge command to power-down entry (BC4MRS)	tWRAPBC4DEN	MIN = WL + 2 + WR + 1						CK	1
ODT Timing									
Direct ODT turn-on latency	DODTLon	WL -2 = CWL + AL + PL -2						CK	
Direct ODT turn-off latency	DODTLoff	WL -2 = CWL + AL + PL -2						CK	
R_{tt} dynamic change skew	tADC	0.3	0.7	0.3	0.7	0.3	0.7	CK	
Asynchronous $R_{TT(NOM)}$ turn-on delay (DLL off)	tAONAS	1	9	1	9	1	9	ns	
Asynchronous $R_{TT(NOM)}$ turn-off delay (DLL off)	tAOFAS	1	9	1	9	1	9	ns	
ODT HIGH time with	ODTH8 1tCK	6	-	6	-	6	-	CK	

An Important Notice at the end of this datasheet addresses availability, warranty, changes, use in critical applications, intellectual property matters and other important disclaimers.

Speed		DDR4-1866		DDR4-2133		DDR4-2400		Units	Note
Parameter	Symbol	MIN	MAX	MIN	MAX	MIN	MAX		
WRITE command and BL8	ODTH8 2tCK	7	-	7	-	7	-		
ODT HIGH time without WRITE command or with WRITE command and BC8	ODTH4 1tCK	4	-	4	-	4	-	CK	
	ODTH4 2tCK	5	-	5	-	5	-		
Write Leveling Timing									
First DQS_t, DQS_c rising edge after write leveling mode is programmed	tWLMRD	40	-	40	-	40	-	CK	
DQS_t, DQS_c delay after write leveling mode is programmed	tWLDQSEN	25	-	25	-	25	-	CK	
Write leveling setup from rising CK_t. CK_c crossing ro rising DQS_t, DQS_c crossing	tWLS	0.13	-	0.13	-	0.13	-	tCK(avg)	
Write leveling hold from rising CK_t. CK_c crossing ro rising DQS_t, DQS_c crossing	tWLH	0.13	-	0.13	-	0.13	-	tCK(avg)	
Write leveling output delay	tWLO	0	0.95	0	0.95	0	0.95	ns	
Write leveling output error	tWLOE	0	2	0	2	0	2	ns	

Notes:

1. Start of internal write transaction is defined as follows:
    a. For BL8 (Fixed by MRS and on-the-fly): Rising clock edge 4 clock cycles after WL.
    b. For BC4 (on-the-fly): Rising clock edge 4 clock cycles after WL.
    c. For BC4 (fixed by MRS): Rising clock edge 2 clock cycles after WL.
2. A separate timing parameter will cover the delay from write to read when CRC and DM are simultaneously enabled
3. Commands requiring a locked DLL are: READ (and RAP) and synchronous ODT commands.
4. tWR is defined in ns, for calculation of tWRPDEN it is necessary to round up tWR/tCK to the next integer.
5. WR in clock cycles as programmed in MR0.
6. tREFI depends on TOPER.
7. CKE is allowed to be registered low while operations such as row activation, precharge, autoprecharge or refresh are in progress, but power-down IDD spec will not be applied until finishing those operations.
8. Although CKE is allowed to be registered LOW after a REFRESH command once tREFPDEN(min) is satisfied, there are cases where additional time such as tXPDLL(min) is also required.
9. For these parameters, the DDR4 SDRAM device supports tnPARAM[nCK]=RU{tPARAM[ns]/tCK(avg)[ns]}, which is in clock cycles assuming all input clock jitter specifications are satisfied
10. When CRC and DM are both enabled, tWR_CRC_DM is used in place of tWR.
11. When CRC and DM are both enabled tWTR_S_CRC_DM is used in place of tWTR_S.
12. When CRC and DM are both enabled tWTR_L_CRC_DM is used in place of tWTR_L.
13. The max values are system dependent.
14. DQ to DQS total timing per group where the total includes the sum of deterministic and random timing terms for a specified BER.
15. The deterministic component of the total timing.
16. DQ to DQ static offset relative to strobe per group.

An Important Notice at the end of this datasheet addresses availability, warranty, changes, use in critical applications, intellectual property matters and other important disclaimers.

17. This parameter will be characterized and guaranteed by design.
18. When the device is operated with the input clock jitter, this parameter needs to be derated by the actual tjit(per)_total of the input clock. (output) Deratings are relative to the SDRAM input clock).
19. DRAM DBI mode is off.
20. DRAM DBI mode is enabled. Applicable to x8 and x16 DRAM only.
21. tQSL describes the instantaneous differential output low pulse width on DQS_t - DQS_c, as measured from on falling edge to the next consecutive rising edge
22. tQSH describes the instantaneous differential output high pulse width on DQS_t - DQS_c, as measured from on falling edge to the next consecutive rising edge
23. There is no maximum cycle time limit besides the need to satisfy the refresh interval tREFI
24. tCH(abs) is the absolute instantaneous clock high pulse width, as measured from one rising edge to the following falling edge
25. tCL(abs) is the absolute instantaneous clock low pulse width, as measured from one falling edge to the following rising edge
26. Total jitter includes the sum of deterministic and random jitter terms for a specified BER.
27. The deterministic jitter component out of the total jitter. This parameter is characterized and guaranteed by design.
28. This parameter has to be even number of clocks
29. When CRC and DM are both enabled, tWR_CRC_DM is used in place of tWR.
30. When CRC and DM are both enabled tWTR_S_CRC_DM is used in place of tWTR_S.
31. When CRC and DM are both enabled tWTR_L_CRC_DM is used in place of tWTR_L.
32. After CKE is registered LOW, CKE signal level shall be maintained below VILDC for tCKE specification (Low pulse width).
33. After CKE is registered HIGH, CKE signal level shall be maintained above VIHDC for tCKE specification (HIGH pulse width). UI=tCK(avg).min/2.

An Important Notice at the end of this datasheet addresses availability, warranty, changes, use in critical applications, intellectual property matters and other important disclaimers.

IMPORTANT NOTICE

Teledyne e2v provides technical and reliability data, including datasheets, design resources, application and other recommendations (“Resources”) “as is” at the date of its disclosure. All Teledyne e2v Resources are subject to change without notice to improve reliability, function or design, or otherwise.

These Resources are intended for skilled developers designing with Teledyne e2v products. You are solely responsible for a. selecting the appropriate Teledyne e2v products for your application, b. designing, validating and testing your application, and c. ensuring your application meets applicable standards, and any other safety, security, or other requirements.

Teledyne e2v makes no warranty, representation or guarantee regarding the suitability of these Resources for any particular purpose, or the continuing production of any of its products. Teledyne e2v grants you permission to use these Resources only for the development of an application that uses the Teledyne e2v products described in the Resource. Other reproduction and display of these Resources are not permitted. No license, express or implied, to Teledyne e2vintellectual property right or to any third party intellectual property right is granted by this document or by the conduct of Teledyne e2v.

To the maximum extent permitted by law, Teledyne e2v disclaims (i) any and all liability for any errors, inaccuracies or incompleteness contained in these Resources, or arising out of the application of or use of these Resources, and (ii) any and all express or implied warranties, including those of merchantability, fitness for a particular purpose or non-infringement of intellectual property rights. You shall fully indemnify Teledyne e2v against, any claims, damages, costs, losses, and liabilities arising out of your application of or use of these Resources.

Teledyne e2v’s acceptance of any products purchase orders is expressly conditioned upon your assent to Teledyne e2v’s General Terms and Conditions of Sale which are stated in any Teledyne e2v’s offer and can be found at www.teledyne-e2v.com/about-us/terms-and-conditions/.

The provision of these Resources by Teledyne e2v does not expand or otherwise alter Teledyne e2v’s applicable warranties or warranty disclaimers for Teledyne e2v products.

Mailing Address: Teledyne e2v Semiconductors SAS, 4 rue de Rochepleine, 38120 Saint Egrève - France.

Telephone: +33 4 76 58 30 00

e-mail: hotline-std@teledyne.com

Copyright © 2024, Teledyne e2v Semiconductors SAS